The following catalog has gaps in its page numbers, or doesn’t have any numbers. We have chosen to leave the page numbering in the order that Acrobat assigns it.

Onan

Parts Manual

DVH
GenSet

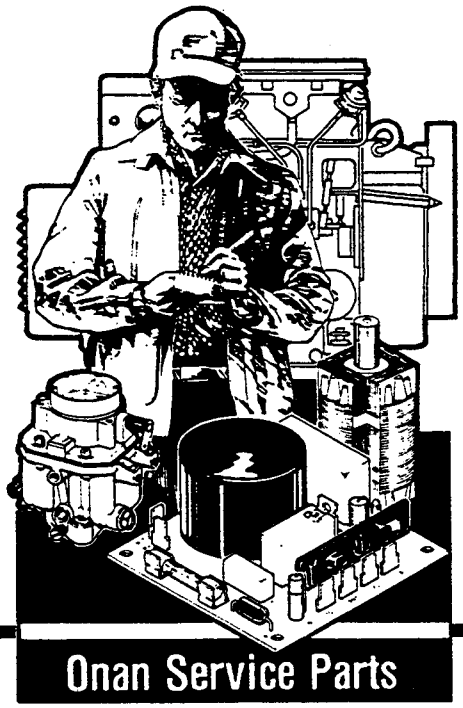

982-0228
8-86 (Spec A-B)
Replaces 11-85 (Spec A)
Printed in U.S.A.

General Information

For parts or service, contact the dealer from whom you purchased this equipment or refer to your Nearest Authorized Onan Parts and Service Center.

To avoid errors or delay in filling your parts order, always give the MODEL, SPEC NO. and SERIAL NO. from the Onan nameplate.

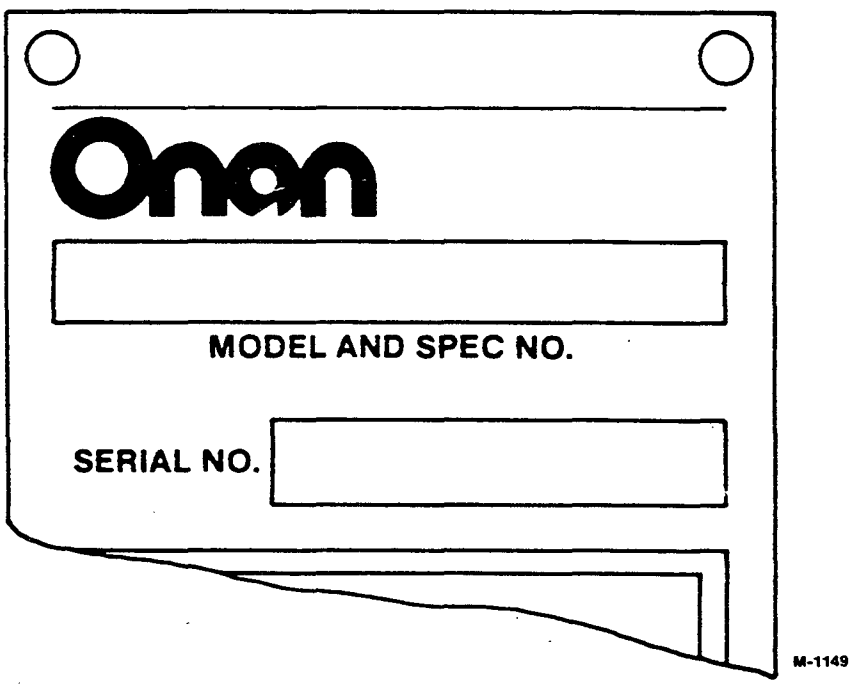

For handy reference, insert "YOUR" nameplate information in the spaces above.

Important Safety Precautions

Read and observe these safety precautions when using or working on electric generators, engines and related equipment. Also read and follow the literature provided with the equipment.

Proper operation and maintenance are critical to performance and safety. Electricity, fuel, exhaust, moving parts and batteries present hazards that can cause severe personal injury or death.

FUEL, ENGINE OIL, AND FUMES ARE FLAMMABLE AND TOXIC

Fire, explosion, and personal injury can result from improper practices.

- Used engine oil, and benzene and lead, found in some gasoline, have been identified by government agencies as causing cancer or reproductive toxicity. When checking, draining or adding fuel or oil, do not ingest, breathe the fumes, or contact gasoline or used oil.
- Do not fill tanks with engine running. Do not smoke around the area. Wipe up oil or fuel spills. Do not leave rags in engine compartment or on equipment. Keep this and surrounding area clean.
- Inspect fuel system before each operation and periodically while running.
- Equip fuel supply with a positive fuel shutoff.
- Do not store or transport equipment with fuel in tank.
- Keep an ABC–rated fire extinguisher available near equipment and adjacent areas for use on all types of fires except alcohol.
- Unless provided with equipment or noted otherwise in installation manual, fuel lines must be copper or steel, secured, free of leaks and separated or shielded from electrical wiring.
- Use approved, non-conductive flexible fuel hose for fuel connections. Do not use copper tubing as a flexible connection. It will work–harden and break.

EXHAUST GAS IS DEADLY

- Engine exhaust contains carbon monoxide (CO), an odorless, invisible, poisonous gas. Learn the symptoms of CO poisoning.
- Never sleep in a vessel, vehicle, or room with a genset or engine running unless the area is equipped with an operating CO detector with an audible alarm.
- Each time the engine or genset is started, or at least every day, thoroughly inspect the exhaust system. Shut down the unit and repair leaks immediately.
- Warning: Engine exhaust is known to the State of California to cause cancer, birth defects and other reproductive harm.

Make sure exhaust is properly ventilated.

- Vessel bilge must have an operating power exhaust.
- Vehicle exhaust system must extend beyond vehicle perimeter and not near windows, doors or vents.
- Do not use engine or genset cooling air to heat an area.
- Do not operate engine/genset in enclosed area without ample fresh air ventilation.
- Expel exhaust away from enclosed, sheltered, or occupied areas.
- Make sure exhaust system components are securely fastened and not warped.

MOVING PARTS CAN CAUSE SEVERE PERSONAL INJURY OR DEATH

- Do not remove any guards or covers with the equipment running.
- Keep hands, clothing, hair, and jewelry away from moving parts.
- Before performing any maintenance, disconnect battery (negative [–] cable first) to prevent accidental starting.
- Make sure fasteners and joints are secure. Tighten supports and clamps, keep guards in position over fans, drive belts, etc.
- If adjustments must be made while equipment is running, use extreme caution around hot manifolds and moving parts, etc. Wear safety glasses and protective clothing.

BATTERY GAS IS EXPLOSIVE

- Wear safety glasses and do not smoke while servicing batteries.
- Always disconnect battery negative (–) lead first and reconnect it last. Make sure you connect battery correctly. A direct short across battery terminals can cause an explosion. Do not smoke while servicing batteries. Hydrogen gas given off during charging is explosive.
- Do not disconnect or connect battery cables if fuel vapors are present. Ventilate the area thoroughly.

DO NOT OPERATE IN FLAMMABLE AND EXPLOSIVE ENVIRONMENTS

Flammable vapor can be ignited by equipment operation or cause a diesel engine to overspeed and become difficult to stop, resulting in possible fire, explosion, severe personal injury and death. **Do not operate diesel equipment where a flammable vapor environment can be created by fuel spill, leak, etc., unless equipped with an automatic safety device to block the air intake and stop the engine.**

HOT COOLANT CAN CAUSE SEVERE PERSONAL INJURY

- Hot coolant is under pressure. Do not loosen the coolant pressure cap while the engine is hot. Let the engine cool before opening the pressure cap.

ELECTRICAL SHOCK CAN CAUSE SEVERE PERSONAL INJURY OR DEATH

- Do not service control panel or engine with unit running. High voltages are present. Work that must be done while unit is running should be done only by qualified service personnel.
- Do not connect the generator set to the public utility or to any other electrical power system. Electrocution can occur at a remote site where line or equipment repairs are being made. An approved transfer switch must be used if more than one power source is connected.
- Disconnect starting battery (negative [–] cable first) before removing protective shields or touching electrical equipment. Use insulative mats placed on dry wood platforms. Do not wear jewelry, damp clothing or allow skin surface to be damp when handling electrical equipment.
- Use insulated tools. Do not tamper with interlocks.
- Follow all applicable state and local electrical codes. Have all electrical installations performed by a qualified licensed electrician. Tag open switches to avoid accidental closure.
- With transfer switches, keep cabinet closed and locked. Only authorized personnel should have cabinet or operational keys. Due to serious shock hazard from high voltages within cabinet, all service and adjustments must be performed by an electrician or authorized service representative.

If the cabinet must be opened for any reason:

1. Move genset operation switch or Stop/Auto/Handcrank switch (whichever applies) to Stop.
2. Disconnect genset batteries (negative [–] lead first).
3. Remove AC power to automatic transfer switch. If instructions require otherwise, use extreme caution due to shock hazard.

MEDIUM VOLTAGE GENERATOR SETS (601V TO 15kV)

- Medium voltage acts differently than low voltage. Special equipment and training are required to work on or around medium voltage equipment. Operation and maintenance must be done only by persons trained and qualified to work on such devices. Improper use or procedures will result in severe personal injury or death.
- Do not work on energized equipment. Unauthorized personnel must not be permitted near energized equipment. Induced voltage remains even after equipment is disconnected from the power source. Plan maintenance with authorized personnel so equipment can be de-energized and safely grounded.

GENERAL SAFETY PRECAUTIONS

- Do not work on equipment when mentally or physically fatigued or after consuming alcohol or drugs.
- Carefully follow all applicable local, state and federal codes.
- Never step on equipment (as when entering or leaving the engine compartment). It can stress and break unit components, possibly resulting in dangerous operating conditions from leaking fuel, leaking exhaust fumes, etc.
- Keep equipment and area clean. Oil, grease, dirt, or stowed gear can cause fire or damage equipment by restricting airflow.
- Equipment owners and operators are solely responsible for operating equipment safely. Contact your authorized Onan/Cummins dealer or distributor for more information.

KEEP THIS DOCUMENT NEAR EQUIPMENT FOR EASY REFERENCE.

Index

Actuator, Governor 54
Adapter, Exhaust 27
Alternator 37
Alternator - Components 38
Arm, Rocker 20
Armature, Starter 34

Bearing, Crankshaft 6
Bearing, Rod - Connecting 6
Belt Set, Drive - V 40
Block, Cylinder 4
Box, Entrance 77
Bracket, Terminal 16
Breaker, Circuit 78

Cable, Battery 34
Cable, Pickup - Magnetic 54
Camshaft 6
Cap, Radiator 46, 48
Cap, Rain - Exhaust 27
Chassis 55
Cleaner, Air - Standard 51
Clutch, Starter 34
Coil, Field - Starter 34
Control, Engine 66
Control, Generator 68
Cooler, Oil 15
Cooling System, Standard 46
Cooling System, Hi Temperature 48
Cover, Gear 10
Cover, Head - Cylinder 20
Crankshaft 6

Drain, Oil 12

Element, Cleaner - Air 51
Exhaust System 27

Fan, Cooling 40
Filter, Air 51
Filter, Fuel 33
Filter, Oil 16
Flywheel 14

Gauge, Pressure - Oil 66
Gauge, Temperature - Oil 66
Gauge, Temperature - Water 66
Gear, Ring 14
Gearcase 10
Generator 58, 60
Governor, Electronic 54
Guard, Belt 46, 48
Guard, Fan 46, 48

Harness, Wiring - Control (AC) 68
Harness, Wiring - Control (DC) 66
Harness, Wiring - Control To Engine 34
Harness, Wiring - Lo Coolant Level 46, 47
Harness, Wiring - Watts Transducer 72
Harness, Wiring - Transformer 70
Head, Cylinder 18
Heater, Control 76
Heater, Coolant - Engine 52
Heater, Generator 62
Holder, Nozzle 20
Hose, Drain - Oil 12
Hose, Radiator 46, 48
Housing, Control 74
Housing, Flywheel 14
Housing, Set 56

Impeller, Pump - Water 42
Indicator, Level - Oil 4
Indicator, Service - Air Cleaner 51

Kit, Gasket - Block - Cylinder 4
Kit, Gasket - Head - Cylinder 18
Kit, Gasket - Pump - Water 42

Light, Indicator 66, 68
Line, Fuel 33
Line, Injection - Fuel 30
Liner, Cylinder 4

Manifold, Exhaust 22
Manifold, Intake 28
Meter, Ampere 66, 68
Meter, Frequency 68
Meter, Time - Running 66
Meter, Tach 66
Meter, Volt 68
Meter, Watt 72
Muffler, Exhaust 27

Nozzle, Fuel 20

Pan, Oil 12
Pickup, Magnetic 63
Piston 6
Pump, Injection - Fuel 30
Pump, Injection - Fuel (Components) 32
Pump, Oil 8
Pump, Water 42

Radiator 46, 48
Regulator, Voltage - Alternator 38
Resistor, Current - Cross 71
Rod, Connecting 6
Rod, Push 6
Rotor, Alternator 38
Rotor, Exciter 58
Rotor, Generator 58

Seal, Oil - Front 10
Seal, Oil - Rear 14
Seat, Valve 18
Sender, Level - Lo Coolant 46, 48
Sender, Pressure - Oil 16
Sender, Temperature - Lo Engine 42
Sender, Temperature - Oil 15
Sender, Temperature - Water 16
Solenoid, Start/Stop 36
Starter 34
Stator, Alternator 38
Stator, Exciter 58
Stator, Generator 58
Switch, Level - Lo Coolant 46, 48
Switch, Overspeed 64
Switch, Pressure - Oil 16
Switch, Safety - Oil 16
Switch, Shutdown - Pre Oil 16
Switch, Temperature - Hi Engine 16
Switch, Temperature - Lo Engine 42

Thermostat 42
Thermostat, Cooler - Oil 15
Thermostat, Temp - Hi Water 16
Thermostat, Temp - Pre Water 42
Transducer, Watt 72
Transformer, Current 70, 71
Turbocharger 22
Turbocharger Components 24

Valve, Delivery - Fuel 32
Valve, Drain - Oil 12
Valve, Exhaust 18
Valve, Intake 18

Introduction

This Parts Manual applies to the Standard Sets Listed below. The illustrations are arranged in groups of related items, and each part or assembly is identified by a Reference Number. All parts illustrated are typical, and unless otherwise mentioned in the description column the parts are interchangeable between models.

These typical illustrations are subject to change and reflect only the latest replacement parts arrangement. The Right and Left sides of the Set are determined by FACING the FRONT (Engine end) of the Set.

Set Data Table

MODEL IDENTIFICATION	RATING	RPM RATING	BATTERY VOLTAGE
265.0 DVH - */ # @	265,000 WATTS	1500 RPM	24 VDC
300.0 DVH - */ # @	300,000 WATTS	1800 RPM	24 VDC

Electrical Data Table

*VOLTAGE CODE	VOLTS	HERTZ	WIRE	PHASE	NOTES
47	220/380 120/208 120/240 127/220 139/240 240/416 254/440 277/480	60	12	3	+
547	120/208 127/220 220/380 240/416 254/480 139/240	50	12	3	+

* - Voltage Codes follow Model Letter designations.
\# - Specification Number: Number 1 is Standard, all others indicate varations.
@ - Specification Letter: Letter advances (A to B, B to C, etc) with major manufacturing changes.
\+ - These Generators are Reconnectible, Refer To Operator's Manual for wiring data.

Cylinder Block

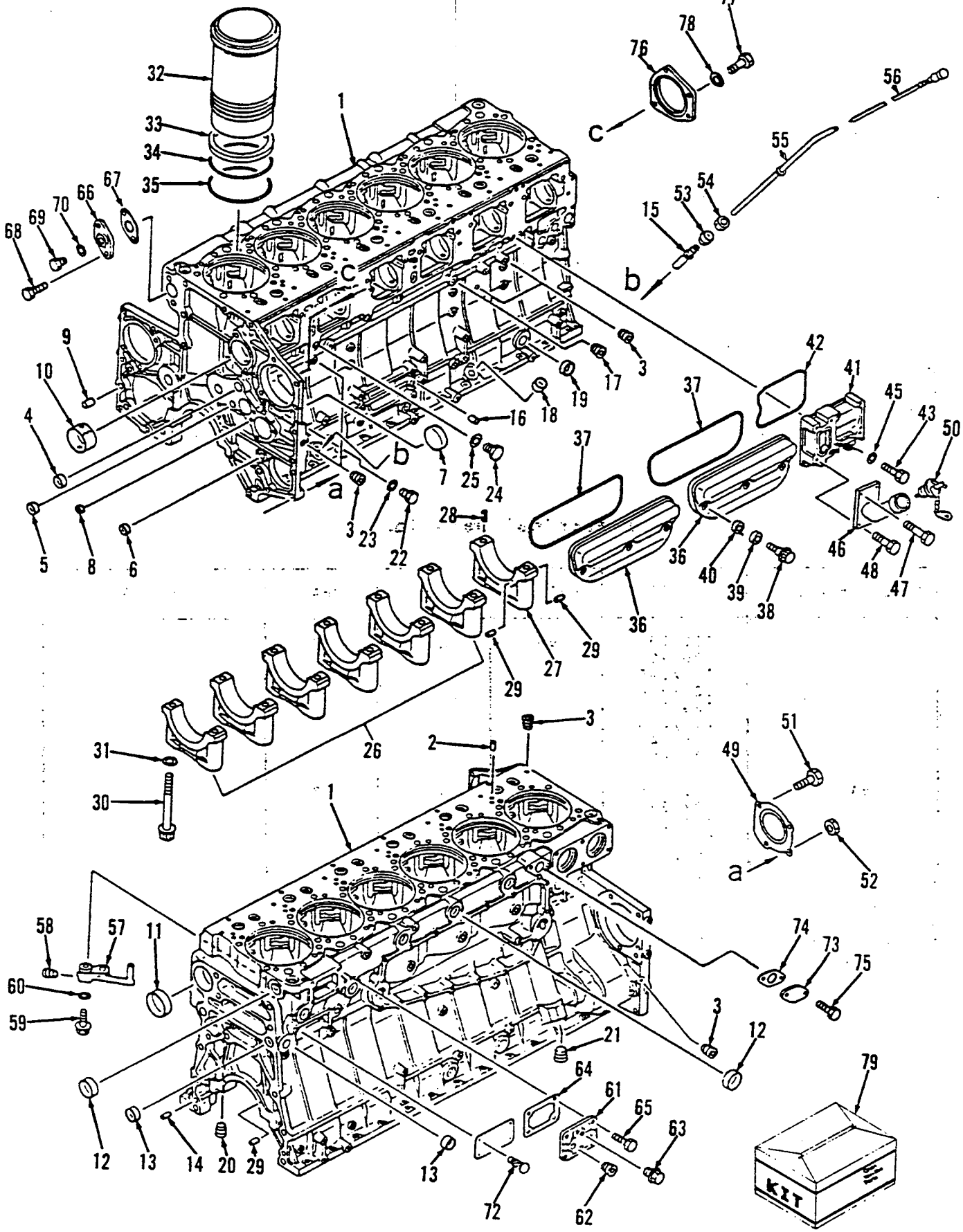

Cylinder Block

REF NO.	PART NO.	QTY USED	PART DESCRIPTION
1	186-1961	1	Block Assembly, Cylinder (Includes Parts Marked *)
2	186-0743	12	*Pin, Dowel
3	186-0154	13	*Plug
4	186-0695	2	*Plug
5	186-0693	2	*Plug
6	186-1742	2	*Plug
7	186-1809	1	*Bushing
8	186-0692	1	*Plug
9	186-1815	3	*Pin
10	186-1807	7	*Bushing, Camshaft
11	186-1744	1	*Plug
12	186-1743	7	*Plug
13	186-1943	2	*Plug
14	186-1298	2	*Pin, Dowel
15	186-1232	1	*Bushing
16	186-1405	2	*Pin, Dowel
17	186-1223	1	*Plug
18	186-0746	1	*Plug
19	186-0157	2	*Plug
20	186-0155	1	*Plug
21	186-1739	1	*Plug
22	186-1737	1	*Plug
23	186-0145	1	*Gasket
24	186-1738	2	*Plug
25	186-0147	2	*Gasket
26	186-1804	6	*Cap, Metal - Main
27	186-1805	1	*Cap, Metal - Main
28	186-0122	2	*Pin, Dowel
29	186-1806	6	*Pin
30	186-1808	14	*Bolt
31	186-0507	14	*Washer
32	186-1963	6	Liner, Cylinder
33	186-1820	6	Seal, Crevice
34	186-1819	6	Seal, O-Ring - Center
35	186-1818	6	Seal, O-Ring - Lower
36	186-1834	2	Cover
37	186-1248	2	Seal, O-Ring
38	186-1838	6	Bolt
39	186-0219	6	Washer
40	186-0220	6	Packing
41	186-1835	1	Cover
42	186-1836	1	Seal, O-Ring
43	186-1179	2	Bolt
45	186-0103	2	Washer
46	186-1839	1	Filler, Oil
47	186-1263	1	Bolt
48	186-1179	3	Bolt
49	186-1813	1	Cover
50	186-1736	1	Cap
51	186-1673	1	Bolt
52	186-1700	3	Nut
53	186-1250	1	Collar
54	186-1251	1	Nut
55	186-2072	1	Guide, Gauge
56	186-1832	1	Gauge, Oil
57	186-1810	1	Nozzle (Includes Plug)
58	186-1810	1	Plug (Included Nozzle)
59	186-1534	6	Bolt
60	186-0904	6	Washer
61	186-1962	1	Cover
62	186-0907	2	Plug
64	186-1817	1	Gasket
65	186-1268	4	Bolt
66	186-1816	1	Flange
67	186-2069	1	Gasket
68	186-1306	2	Bolt
69	186-1738	1	Plug
70	186-0147	1	Gasket
72	186-0753	4	Screw
73	186-1811	1	Plate
74	186-1921	1	Gasket
75	186-1268	2	Bolt
76	186-1812	1	Cover
77	186-1306	1	Bolt
78	186-0104	1	Washer
79	186-2076	1	Gasket Kit, Block - Cylinder

* Parts included in 186-1961 Cylinder Block Assembly

Crankshaft, Camshaft, Piston, And Connecting Rod

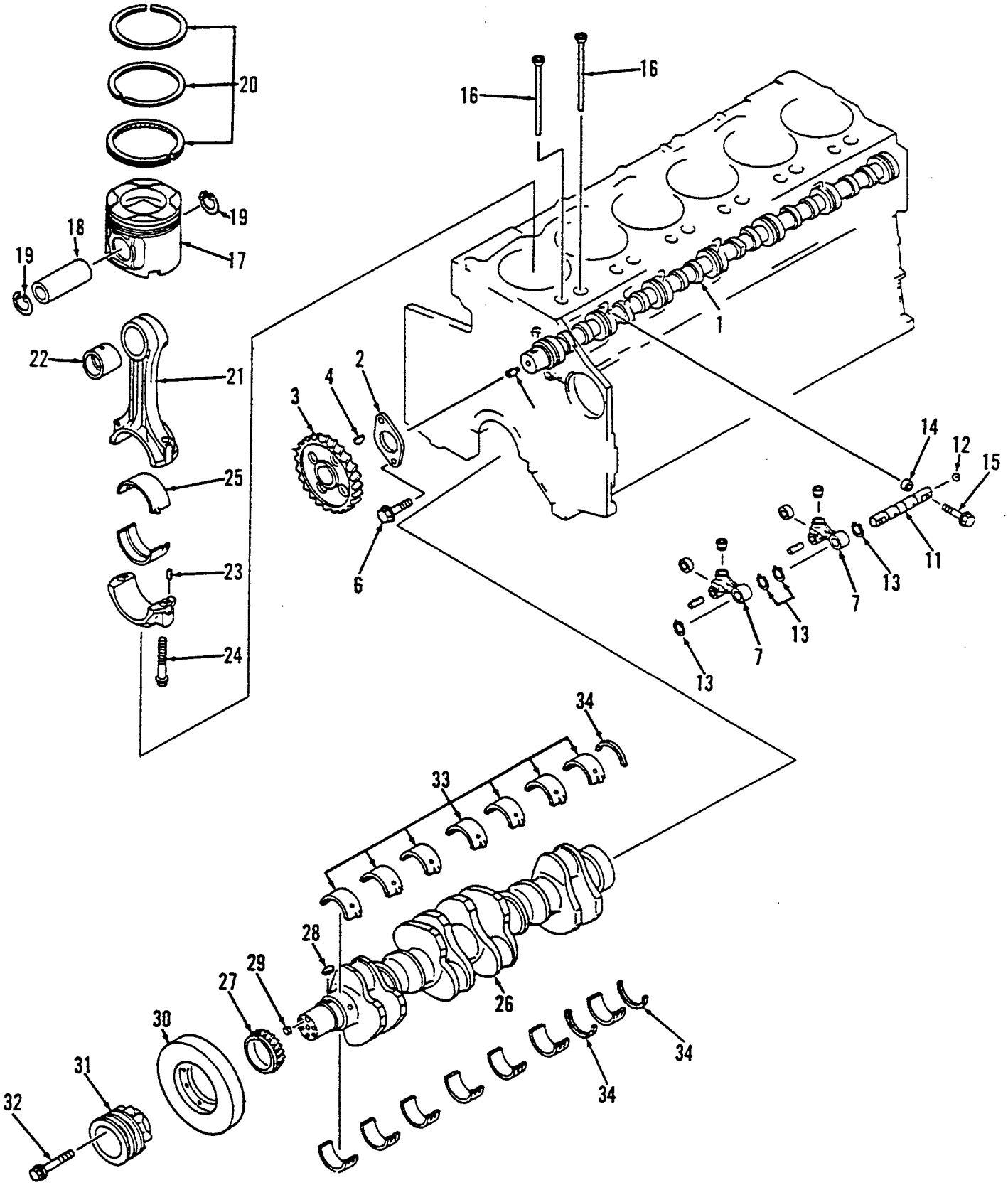

Crankshaft, Camshaft, Piston, And Connecting Rod

REF NO.	PART NO.	QTY USED	PART DESCRIPTION
1	186-1865	1	Camshaft
2	186-1867	1	Plate, Thrust
3	186-1866	1	Gear
4	186-1342	1	Key
5	186-1934	1	Shaft
6	186-1941	2	Bolt
7	186-1868	2	Lever Assembly (Includes Socket, Cam Roller, and Pin)
11	186-1869	1	Shaft
13	186-1714	4	Ring, Snap
14	186-1870	12	Ring, Dowel
15	186-1871	12	Bolt
16	186-1872	12	Rod, Push
17	186-2029	6	Piston
18	186-1973	6	Pin, Piston
19	186-1459	12	Ring, Snap
20	186-1972	6	Ring Set, Piston
21	186-1974	6	Rod, Connecting (Includes Bushing, Pin, and Bolt)
22	186-1975	1	Bushing
23	186-1334	2	Pin, Dowel
24	186-1855	2	Bolt
25			Bearing, Rod - Connecting
	186-1854	6	Standard
	186-1864	6	0.25mm Undersize
	186-1863	6	0.50mm Undersize
	186-1862	6	0.75mm Undersize
	186-1861	6	1.00mm Undersize
26	186-1967	1	Crankshaft Assembly (Includes Gear, Key, and Pin)
27	186-1852	1	Gear
28	186-1307	1	Key
29	186-1969	1	Pin
30	186-1976	1	Damper Assembly
31	186-1970	1	Pulley
32	186-1942	6	Bolt
33			Bearing, Main
	186-1840	7	Standard
	186-1850	7	0.25mm Undersize
	186-1848	7	0.50mm Undersize
	186-1846	7	0.75mm Undersize
	186-1844	7	1.00mm Undersize
34			Washer, Thrust
	186-1841	1	Standard
	186-1851	1	0.25mm Oversize
	186-1849	1	0.50mm Oversize
	186-1847	1	0.75mm Oversize
	186-1845	1	1.00mm Oversize

Oil Pump, And Suction Pipe

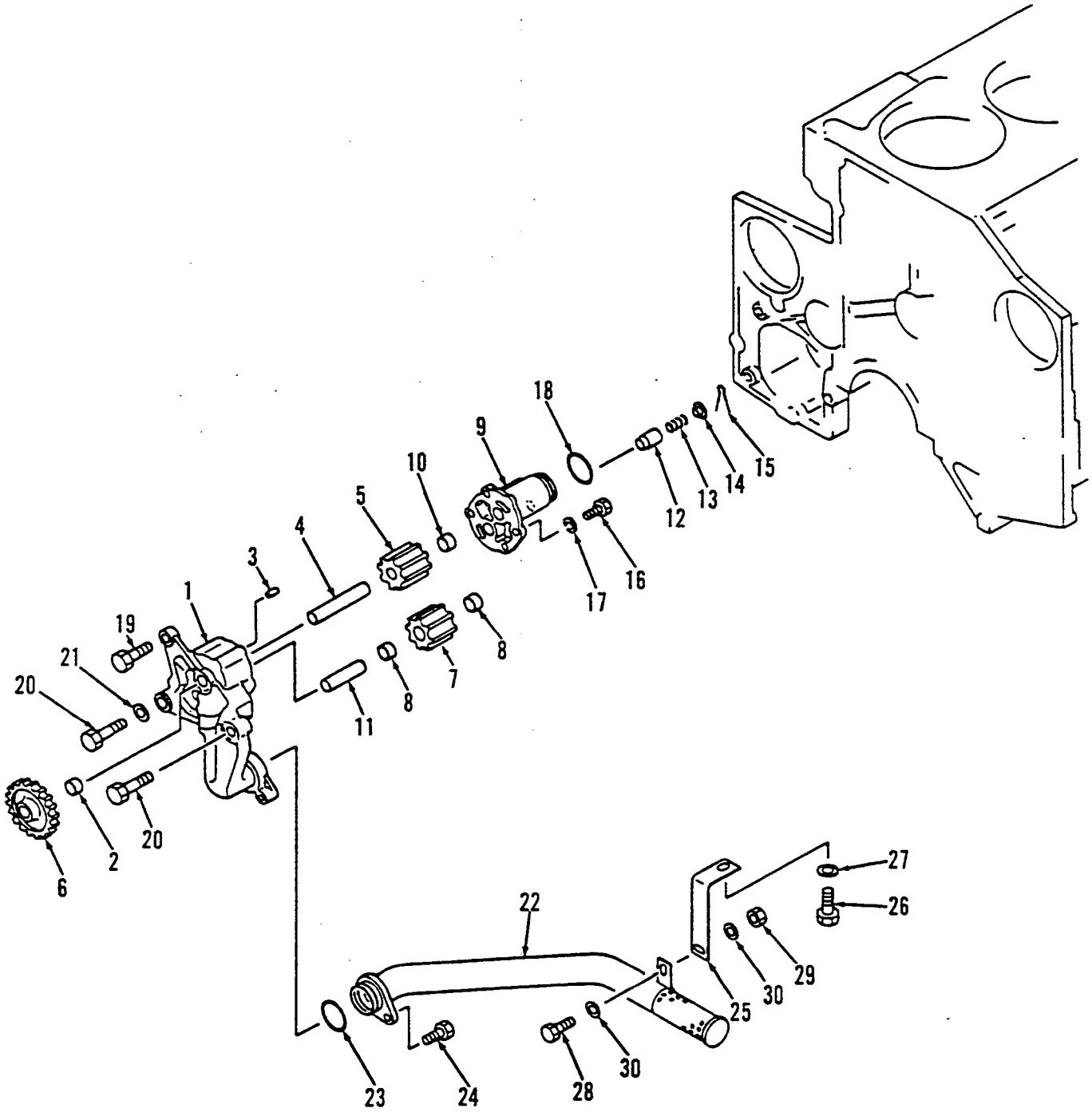

Oil Pump, And Suction Pipe

REF NO.	PART NO.	QTY USED	PART DESCRIPTION
1	186-1977	1	Pump Assembly, Oil (Includes Parts Marked *)
2	186-0323	1	*Bushing
3	186-0328	1	*Pin
4	186-1887	1	*Shaft
5	186-1980	1	*Gear, Drive
6	186-1889	1	*Gear, Drive - Oil Pump
7	186-1979	1	*Gear
8	186-0323	2	*Bushing
9	186-1978	1	*Cover Assembly (Includes Bushing, and Shaft)
10	186-0323	1	*Bushing
11	186-1888	1	*Shaft
12	186-0330	1	*Valve
13	186-0331	1	*Spring
14	186-1354	1	*Retainer
15	186-1713	1	*Pin, Cotter
16	720-1037	4	*Bolt
17	186-0095	4	*Washer
18	186-1731	1	Seal, O-Ring
19	186-1208	1	Bolt
20	720-1076	2	Bolt
21	186-0109	1	Washer
22	186-1895	1	Strainer
23	186-1732	1	Seal, O-Ring
24	186-1360	1	Bolt
25	186-1896	1	Bracket
26	720-1073	1	Bolt
27	186-0104	1	Washer
28	186-1361	1	Bolt
29	186-0090	1	Nut
30	186-0103	2	Washer

* Parts included in 186-1977 Oil Pump Assembly.

Gear Cover

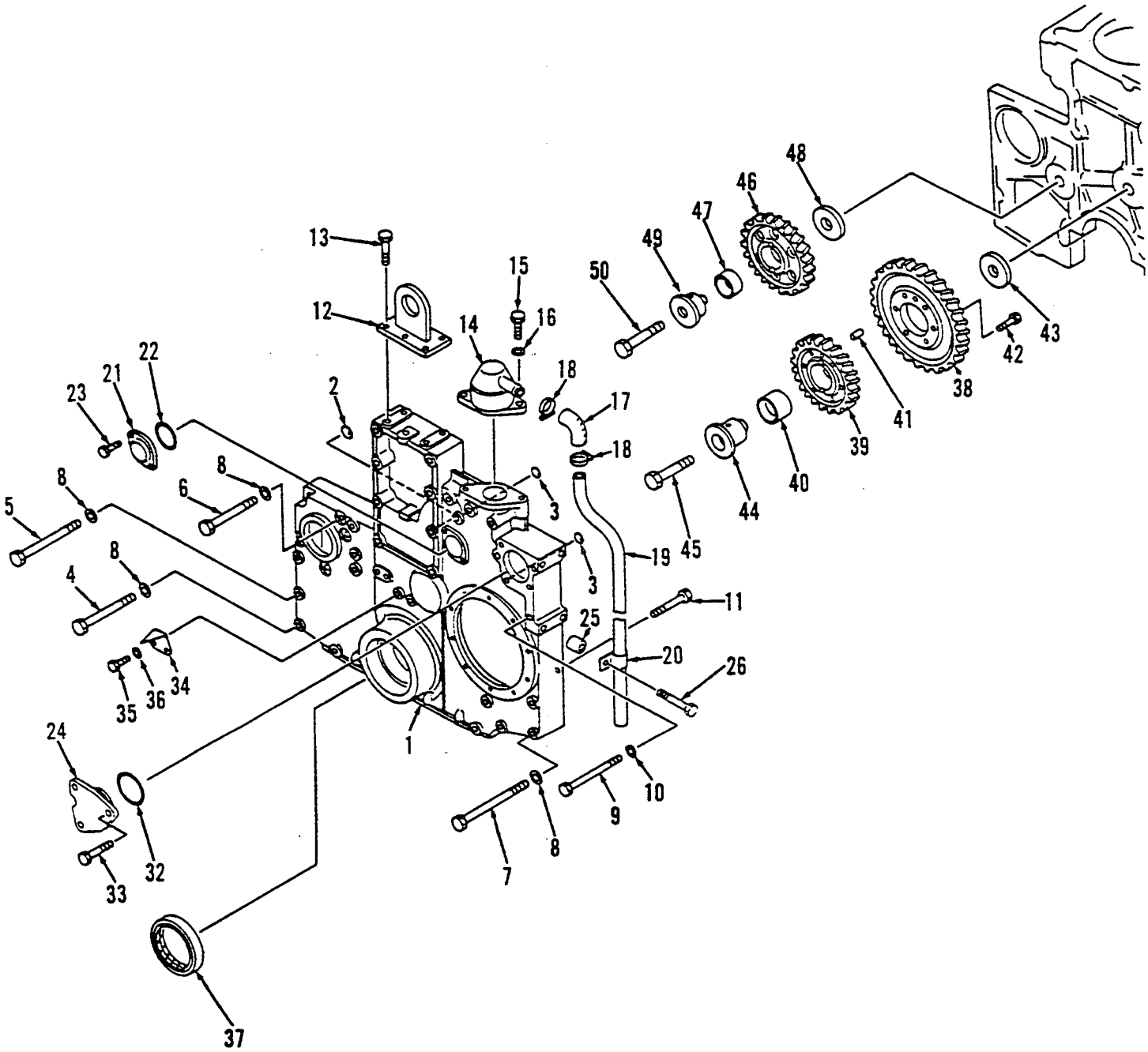
13
12
15
16
14
50
49
47
46
48
43
42
38
41
39
40
44
45
11
19
3
3
18
17
18
2
22
21
23
8
6
8
5
8
4
34
36
35
24
32
33
37
1
7
8
9
10
20
26
25

Gear Cover

REF NO.	PART NO.	QTY USED	PART DESCRIPTION
1	186-1824	1	Cover
2	186-1742	2	Plug
3	186-1741	2	Plug
4	186-1678	6	Bolt
5	186-1686	2	Bolt
6	186-1677	1	Bolt
7	186-1690	3	Bolt
8	186-0104	12	Washer
9	186-1685	3	Bolt
10	186-0103	3	Washer
11	186-1526	2	Bolt
12	186-1827	1	Hanger
13	186-0501	4	Bolt
14	186-1842	1	Breather
15	186-1265	2	Bolt
16	186-0103	2	Washer
17	186-1769	1	Hose
18	186-0168	2	Clamp
19	186-1843	1	Tube
20	186-1754	1	Clip
21	186-0771	1	Cover
22	186-0772	1	Seal, O-Ring
23	186-1668	2	Bolt
24	186-1814	1	Cover
25	186-1756	1	Spacer
26	186-1526	1	Bolt
32	186-1724	1	Seal, O-Ring
33	186-1265	3	Bolt
34	186-1825	1	Pointer
35	186-1667	2	Bolt
36	186-0703	2	Washer
37	186-1277	1	Seal, Front
38	186-1860	1	Gear, Idler
39	186-1859	1	Gear Assembly, Idler (Includes Bushing)
40	186-1858	1	Bushing
41	186-1272	1	Pin, Dowel
42	720-1038	6	Bolt
43	186-1822	1	Plate, Thrust
44	186-1821	1	Shaft
45	186-1692	1	Bolt
46	186-1856	1	Gear Assembly, Idler (Includes Bushing)
47	186-1857	1	Bushing
48	186-1822	1	Plate, Thrust
49	186-1823	1	Shaft
50	186-1691	1	Bolt

Oil Pan

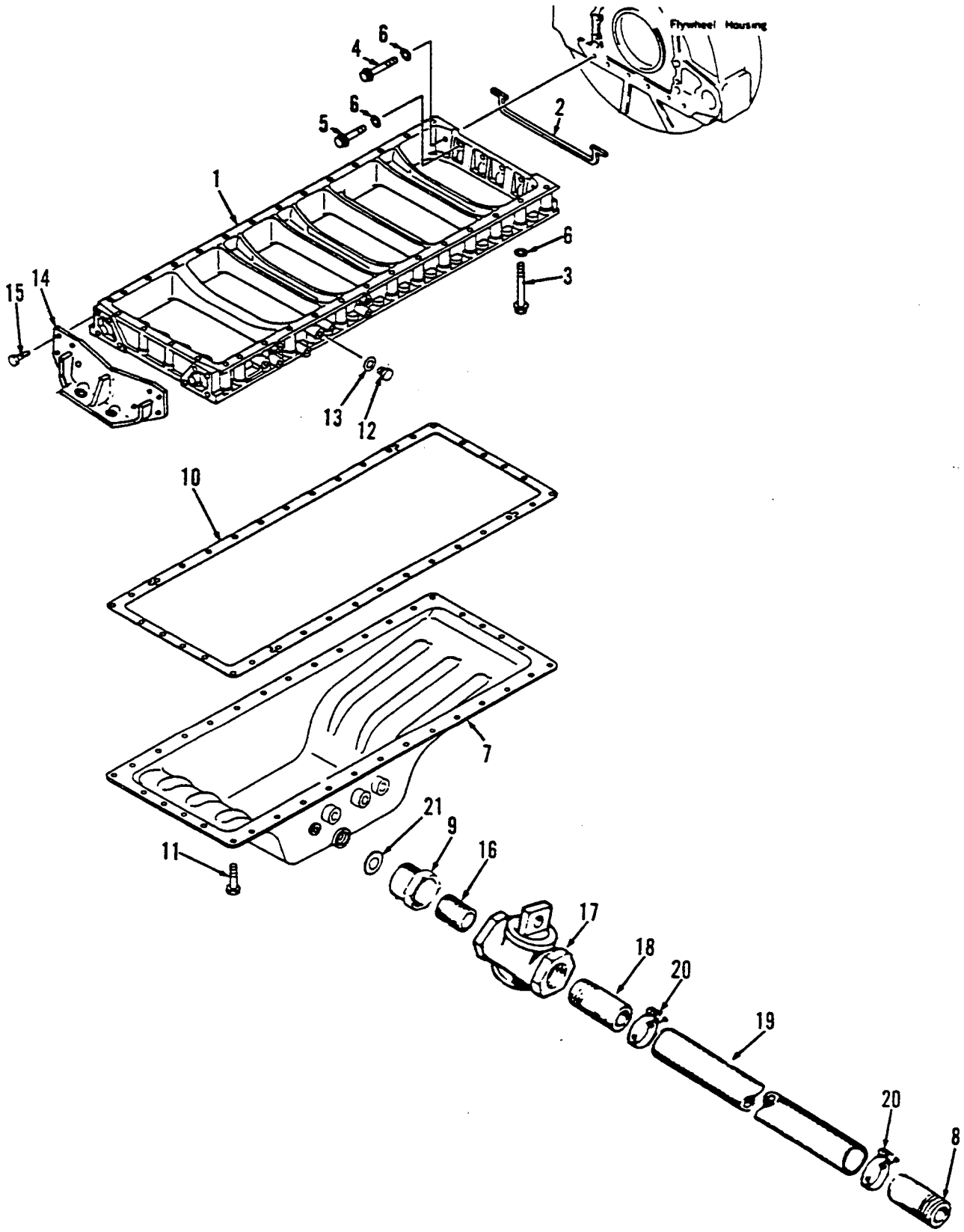
Flywheel Housing
1
2
3
4
5
6
6
6
7
8
9
10
11
12
13
14
15
16
17
18
19
20
20
21

Oil Pan

REF NO.	PART NO.	QTY USED	PART DESCRIPTION
1	186-1830	1	Frame
2	186-1831	1	Gasket
3	186-1944	32	Bolt
4	186-1945	2	Bolt
5	186-1946	4	Bolt
6	186-0103	38	Washer
7	186-1964	1	Pan, Oil
8	505-0185	1	Nipple, Half
9	505-1355	1	Adapter, Pipe
10	186-1833	1	Gasket
11	186-1179	36	Bolt
12	186-0150	1	Plug
13	186-0146	1	Gasket
14	186-1826	1	Bracket
15	186-1674	8	Bolt
16	505-0100	1	Nipple, Pipe
17	504-0011	1	Valve, Shutoff
18	505-0674	2	Nipple, Half
19	503-0098	1	Hose, Drain (14")
20	503-0197	2	Clip, Hose - Corbin
21	509-0207	1	Seal, O-Ring

Flywheel, And Flywheel Housing

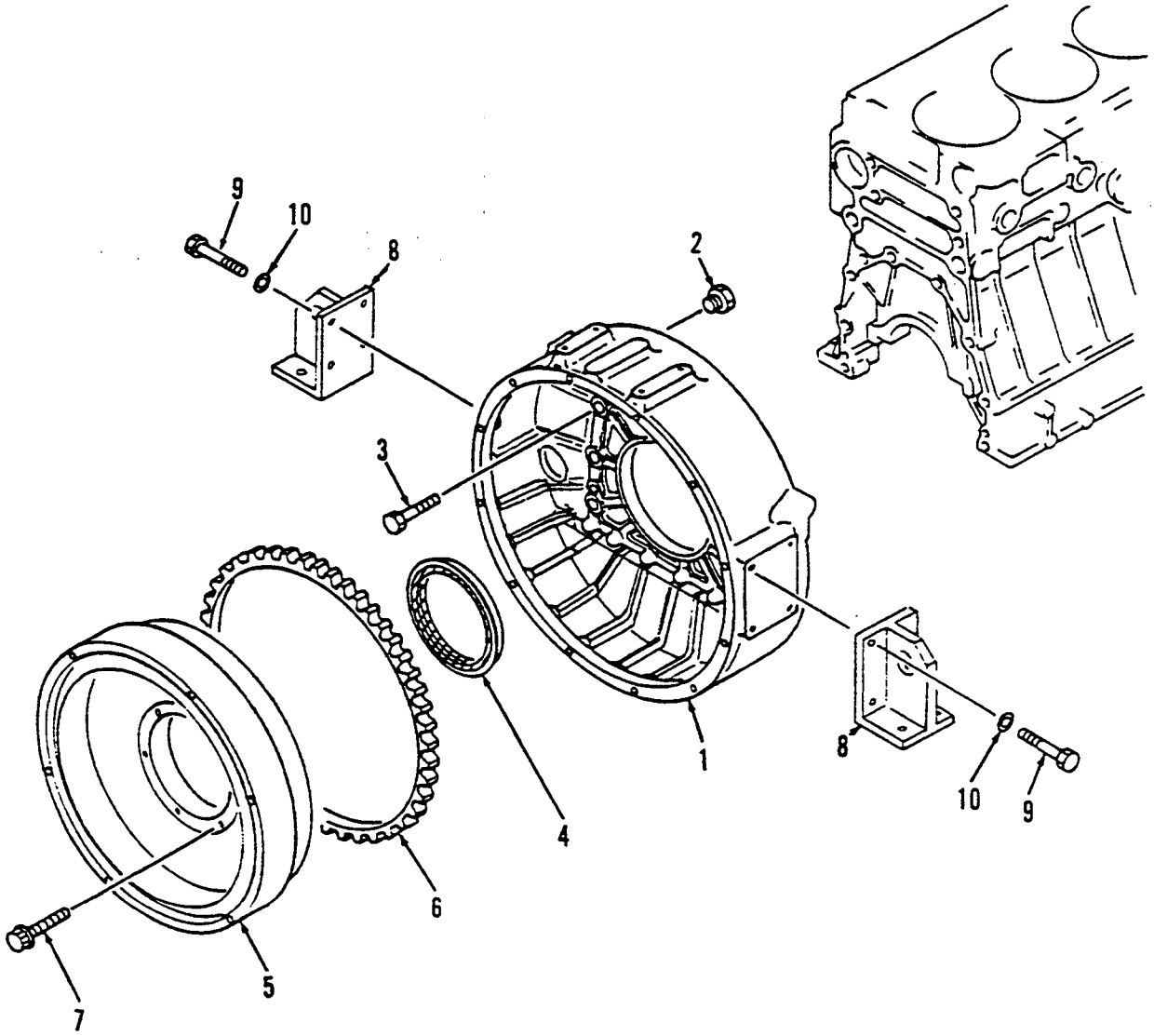

REF NO.	PART NO.	QTY USED	PART DESCRIPTION	REF NO.	PART NO.	QTY USED	PART DESCRIPTION
1	186-1828	1	Housing, Flywheel	6	186-1968	1	Gear, Ring
2	186-0407	1	Plug	7	186-1853	6	Bolt
3	186-1666	8	Bolt	8	186-1829	2	Bracket
4	186-1291	1	Seal, Rear	9	186-1679	8	Bolt
5	186-1971	1	Flywheel Assembly (Includes Ring Gear)	10	186-1225	8	Washer

Oil Cooler

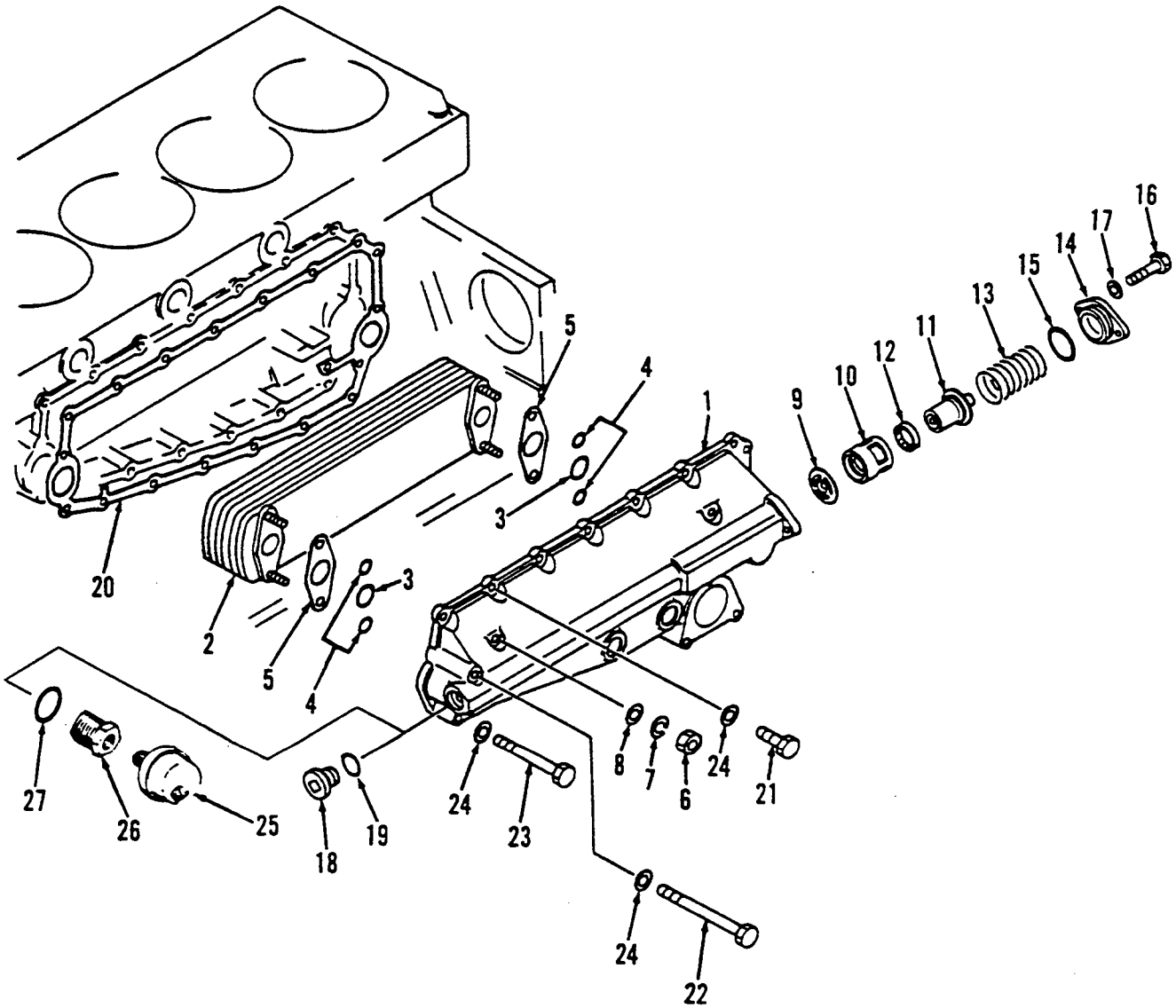

REF NO.	PART NO.	QTY USED	PART DESCRIPTION
1	186-1993	1	Cover
2	186-2030	1	Element, Cooler, Oil
3	186-1731	2	Seal, O-Ring
4	186-1394	4	Seal, O-Ring
5	186-1904	2	Gasket
6	186-1256	4	Nut
7	186-0100	4	Washer, Spring
8	186-0103	4	Washer
9	186-1401	1	Plate
10	186-1400	1	Collar
11	186-1906	1	Thermostat, Cooler - Oil
12	186-1399	1	Seal
13	186-1903	1	Spring
14	186-1902	1	Cover
15	186-1390	1	Seal, O-Ring
16	186-1387	2	Bolt
17	186-0102	2	Washer
18	186-1218	1	Plug
19	186-1905	1	Seal, O-Ring
20	186-1907	1	Gasket
21	186-1268	14	Bolt
22	186-1447	1	Bolt
23	186-1368	1	Bolt
24	186-0103	16	Washer
25	193-0353	1	Sender, Temperature - Oil
26	502-1010	1	Adapter, Pipe
27	509-0224	1	Seal, O-Ring

Oil Filter

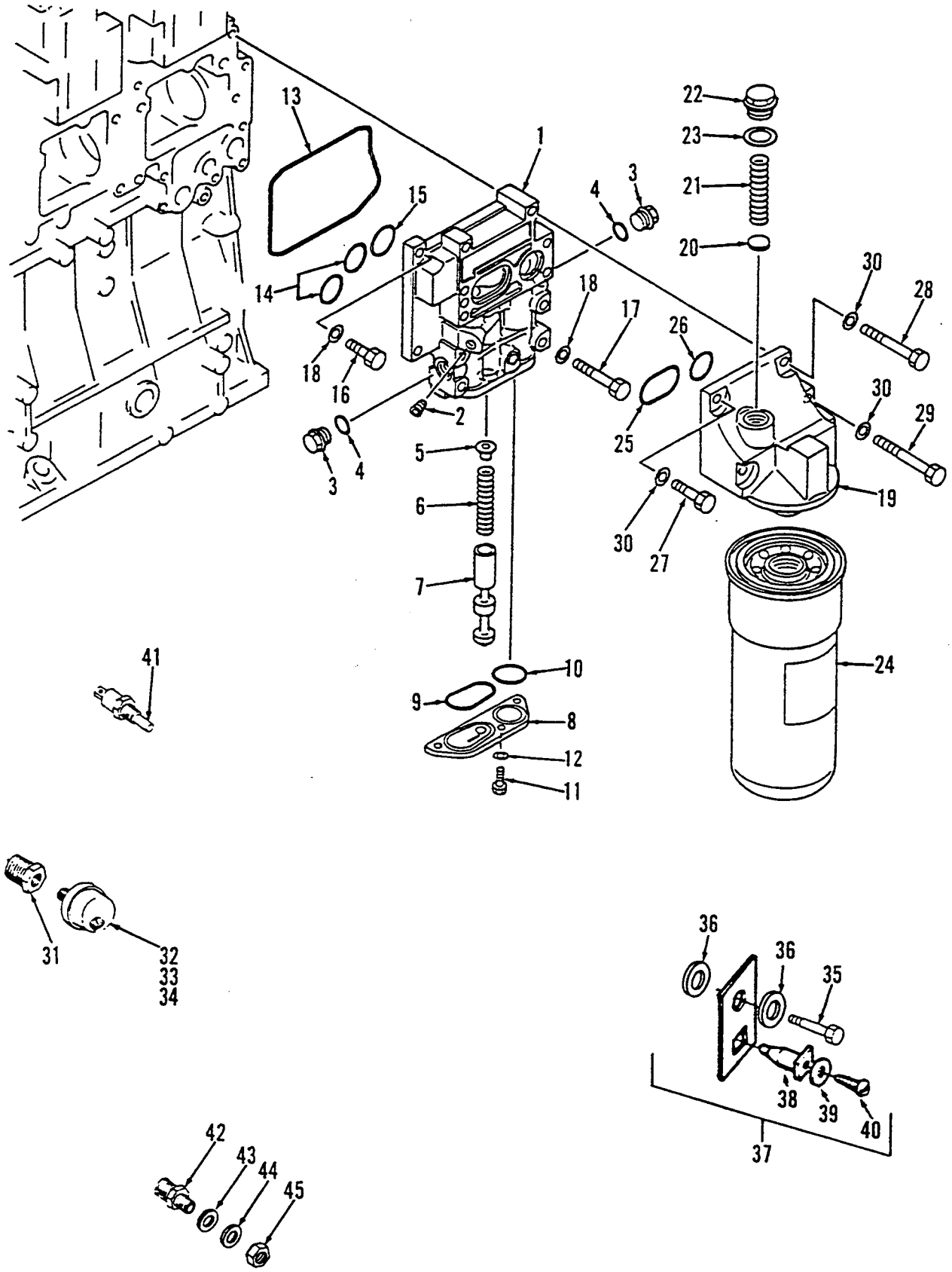
13
1
22
23
21
3
4
15
20
30
28
14
18
17
26
18
16
2
30
29
25
5
4
3
19
6
30
27
7
41
10
24
9
8
12
11
31
32
33
34
36
36
35
38
39
40
37
42
43
44
45

Oil Filter

REF NO.	PART NO.	QTY USED	PART DESCRIPTION
1	186-1982	1	Body
2	186-1223	1	Plug
3	186-1892	2	Plug
4	186-0141	2	Seal, O-Ring
5	186-1894	1	Seat
6	186-1891	1	Spring
7	186-1890	1	Valve
8	186-1983	1	Cover
9	186-1893	1	Seal, O-Ring
10	186-1732	1	Seal, O-Ring
11	720-1035	3	Bolt
12	186-0102	3	Washer
13	186-1837	1	Seal, O-Ring
14	186-0142	2	Seal, O-Ring
15	186-1732	1	Seal, O-Ring
16	186-1179	2	Bolt
17	186-1368	5	Bolt
18	186-0103	7	Washer
19	186-1981	1	Bracket
20	186-1376	1	Packing
21	186-1364	1	Spring
22	186-1377	1	Cap
23	186-1378	1	Packing
24	186-1365	1	Filter, Oil
25	186-1733	1	Seal, O-Ring
26	186-1730	1	Seal, O-Ring
27	186-1266	1	Bolt
28	186-1264	3	Bolt
29	186-1267	1	Bolt
30	186-0103	5	Washer
31	502-0917	3	Adapter, Pipe
32	309-0272	1	Switch, Shutdown - Pre Oil
33	193-0244	1	Sender, Pressure - Oil
34	309-0169	1	Switch, Safety - Oil
35	718-1074	1	Screw, Cap - Hex Head (M12 x 1.75 x 30mm)
36	856-0013	2	Washer, Lock - EIT (1/2)
37	332-2739	1	Bracket Assembly, Terminal (Includes Nut, Washer, And Screw)
38	870-0196	1	Nut, Insulating
39	508-0015	1	Washer, Fiber
40	809-0035	1	Screw, Round Head (#8 x 3/4")
41	309-0522	1	Thermostat, Temperature - Hi Water
42	193-0375	1	Sender, Temperature - Water
43	526-0008	1	Washer, Flat (#10)
44	850-0030	1	Washer, Lock (#10)
45	871-0010	1	Nut, Cap - Hex Head (#10 - 32)

Cylinder Head

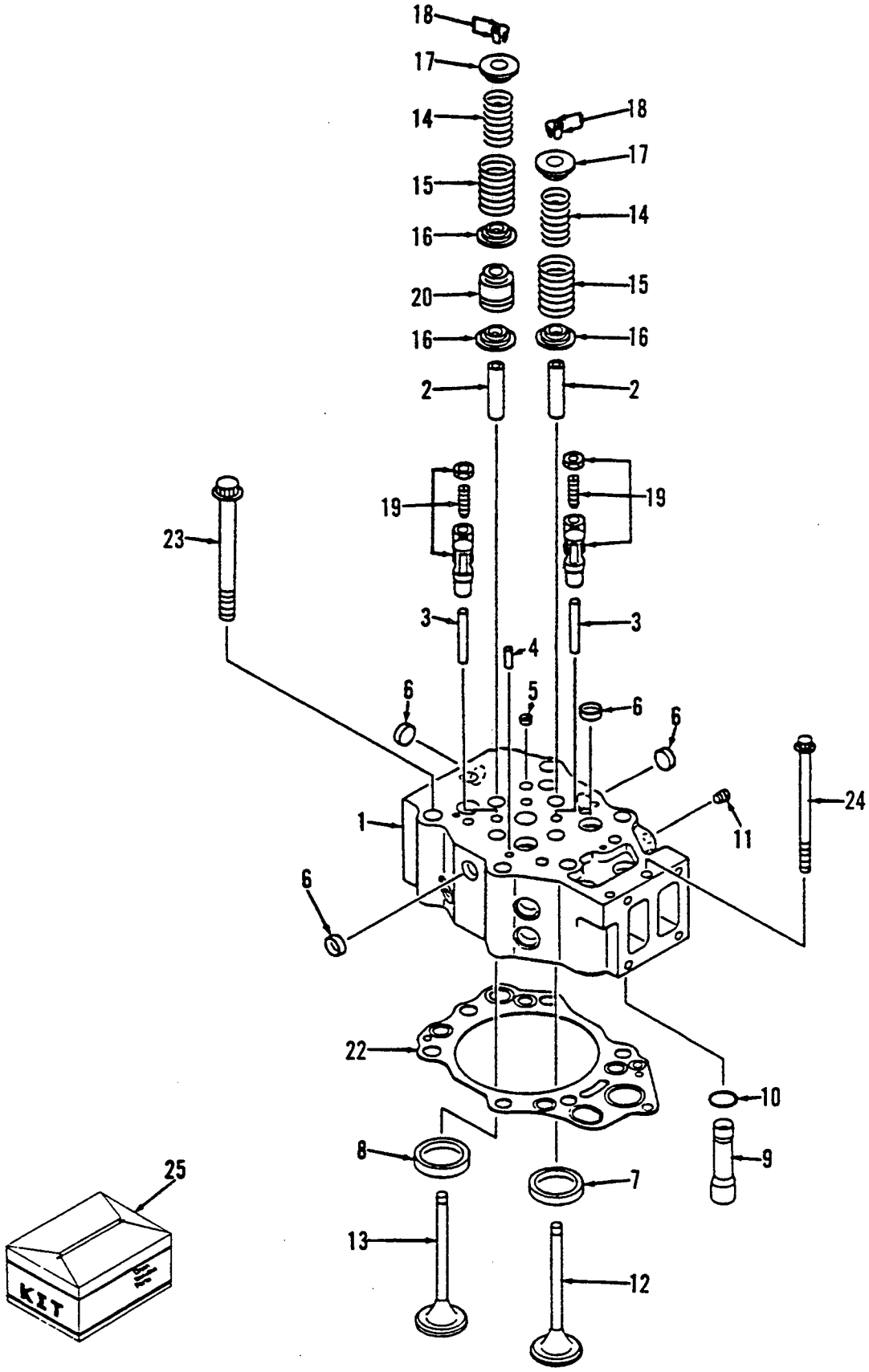

Cylinder Head

REF NO.	PART NO.	QTY USED	PART DESCRIPTION
1			Head Assembly, Cylinder
	186-1947	6	With Valve (Includes Parts Marked *)
	186-1948	1	* Less Valve (Includes Parts Marked +)
2	186-1797	4	+*Guide, Valve
3	186-1777	2	+*Guide, Crosshead
4	186-0743	2	+*Pin, Dowel
5	186-0693	1	+*Plug, Expansion
6	186-1144	12	+*Plug, Expansion
7			Insert, Intake
	186-1780	2	+* Standard
	186-1803	2	0.25mm Oversize
	186-1801	2	0.50mm Oversize
	186-1799	2	0.75mm Oversize
	186-1796	2	1.00mm Oversize
8			Insert, Exhaust
	186-1779	2	+* Standard
	186-1802	2	0.25mm Oversize
	186-1800	2	0.50mm Oversize
	186-1798	2	0.75mm Oversize
	186-1795	2	1.00mm Oversize
9	186-1778	1	+*Pipe
10	186-1729	1	+*Seal, O-Ring
11	186-0156	1	+*Plug
12	186-1873	2	*Valve, Intake
13	186-1874	2	*Valve, Exhaust
14	186-1875	4	*Spring, Inner
15	186-1876	4	*Spring, Outer
16	186-1878	4	*Seat, Lower
17	186-1877	4	*Seat, Upper
18	186-1770	8	*Cotter
19	186-1886	12	Crosshead Assembly (Includes Crosshead, Screw, and Nut)
20	186-1879	2	*Seal, Valve - Exhaust
22	186-1782	6	Gasket, Head
23	186-1781	36	Bolt, Head
24	186-1156	6	Bolt, Head
25	186-2075	1	Gasket Kit, Head - Cylinder

* Parts included in 186-1947 Cylinder Head Assembly.
\+ Parts included in 186-1948 Cylinder Head Assembly.

Fuel Nozzle, Rocker Arm, Cover And Housing

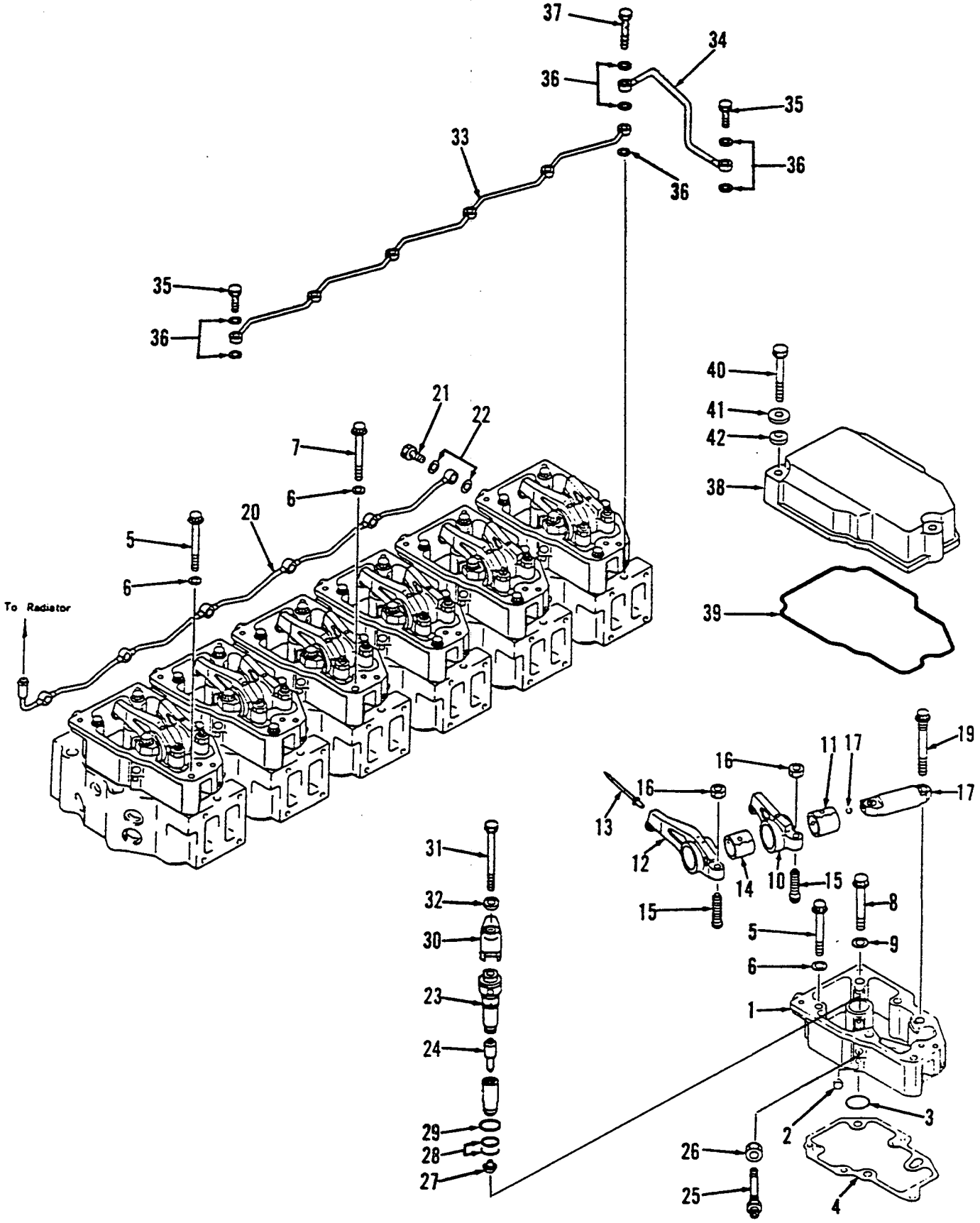

Fuel Nozzle, Rocker Arm, Cover And Housing

REF NO.	PART NO.	QTY USED	PART DESCRIPTION
1	186-1787	6	Housing, Arm - Rocker
2	186-0692	18	Plug, Expansion
3	186-1788	6	Seal, O-Ring
4	186-1790	6	Gasket
5	186-1938	17	Bolt
6	186-1704	18	Washer
7	186-1413	1	Bolt
8	186-1940	6	Bolt
9	186-1705	6	Washer
	186-1881	6	Arm Assembly, Intake (Includes Arm, and Bushing)
10	186-1882	1	Arm, Intake
11	186-1883	1	Bushing
	186-1884	6	Arm Assembly, Exhaust (Includes Arm, Rivet, and Bushing)
12	186-1885	1	Arm, Exhaust
13	186-2071	1	Rivet, Crossed
14	186-1883	1	Bushing
15	186-1166	12	Screw
16	186-1170	12	Nut
17	186-1880	6	Shaft Assembly, Arm - Rocker (Includes Shaft, and Ball)
19	186-1939	12	Bolt
20	186-1786	1	Tube, Air
21	186-0860	6	Bolt, Joint
22	186-0145	12	Gasket
23	186-2019	6	Holder Assembly, Nozzle (Includes Nozzle, Connector, and Nut)
24	186-2020	1	Nozzle
25	186-2021	1	Connector
26	186-1702	1	Nut
27	186-1924	6	Gasket
28	186-1727	12	Seal, O-Ring
29	186-1789	6	Seal, O-Ring
30	186-1923	6	Holder
31	186-1684	6	Bolt
32	186-1922	6	Washer
33	186-2015	1	Tube
34	186-2046	1	Tube
35	186-1745	6	Bolt, Joint
36	186-0144	15	Gasket
37	186-1930	1	Bolt, Joint
38	186-1793	6	Cover, Housing - Rocker Arm
39	186-1794	6	Gasket
40	186-1672	18	Bolt
41	186-1791	18	Washer
42	186-1792	18	Rubber

Exhaust Manifold, And Turbocharger

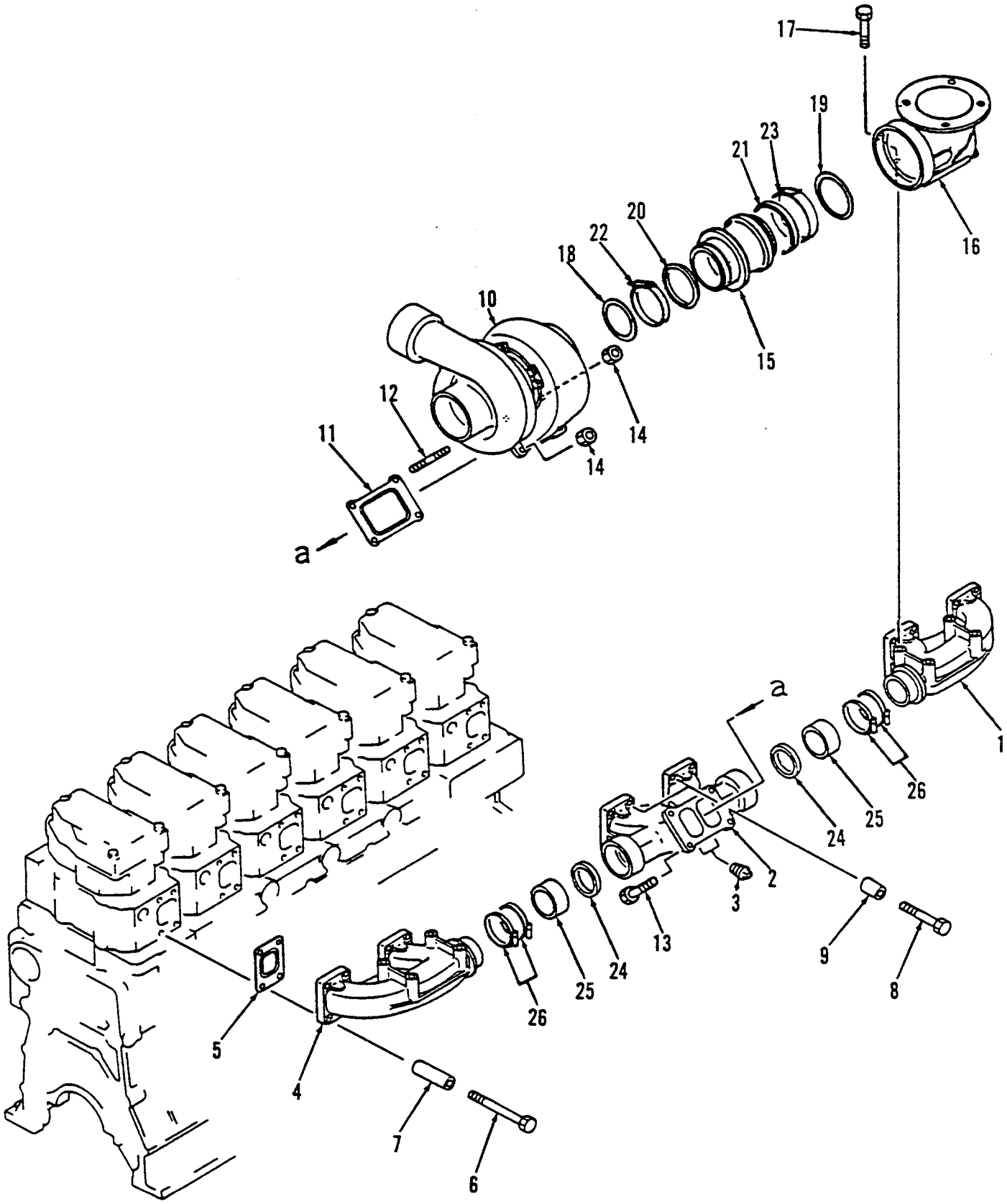

Exhaust Manifold, And Turbocharger

REF NO.	PART NO.	QTY USED	PART DESCRIPTION
1	186-1950	1	Manifold, Exhaust - Front
2	186-1951	1	Manifold, Exhaust - Center
3	186-0153	1	Plug
4	186-1952	1	Manifold, Exhaust - Rear
5	186-1785	6	Gasket
6	186-1689	22	Bolt
7	186-0212	22	Spacer
8	186-1682	2	Bolt
9	186-1784	2	Spacer
10	186-2067	1	Turbocharger Assembly (See Separate Page For Components)
11	186-1191	1	Gasket
12	186-1773	2	Stud
13	186-1196	2	Bolt
14	186-1194	4	Nut
15	186-1958	1	Joint
16	186-1957	1	Elbow, Exhuast
17	186-1681	4	Bolt
18	186-1956	1	Seal, O-Ring
19	186-1953	1	Seal, O-Ring
20	186-1959	1	Seal
21	186-1960	1	Seal
22	186-1750	1	Clamp
23	186-1751	1	Clamp
24	186-1954	2	Seal
25	186-1955	2	Seal
26	186-1749	4	Clamp

Turbocharger Components

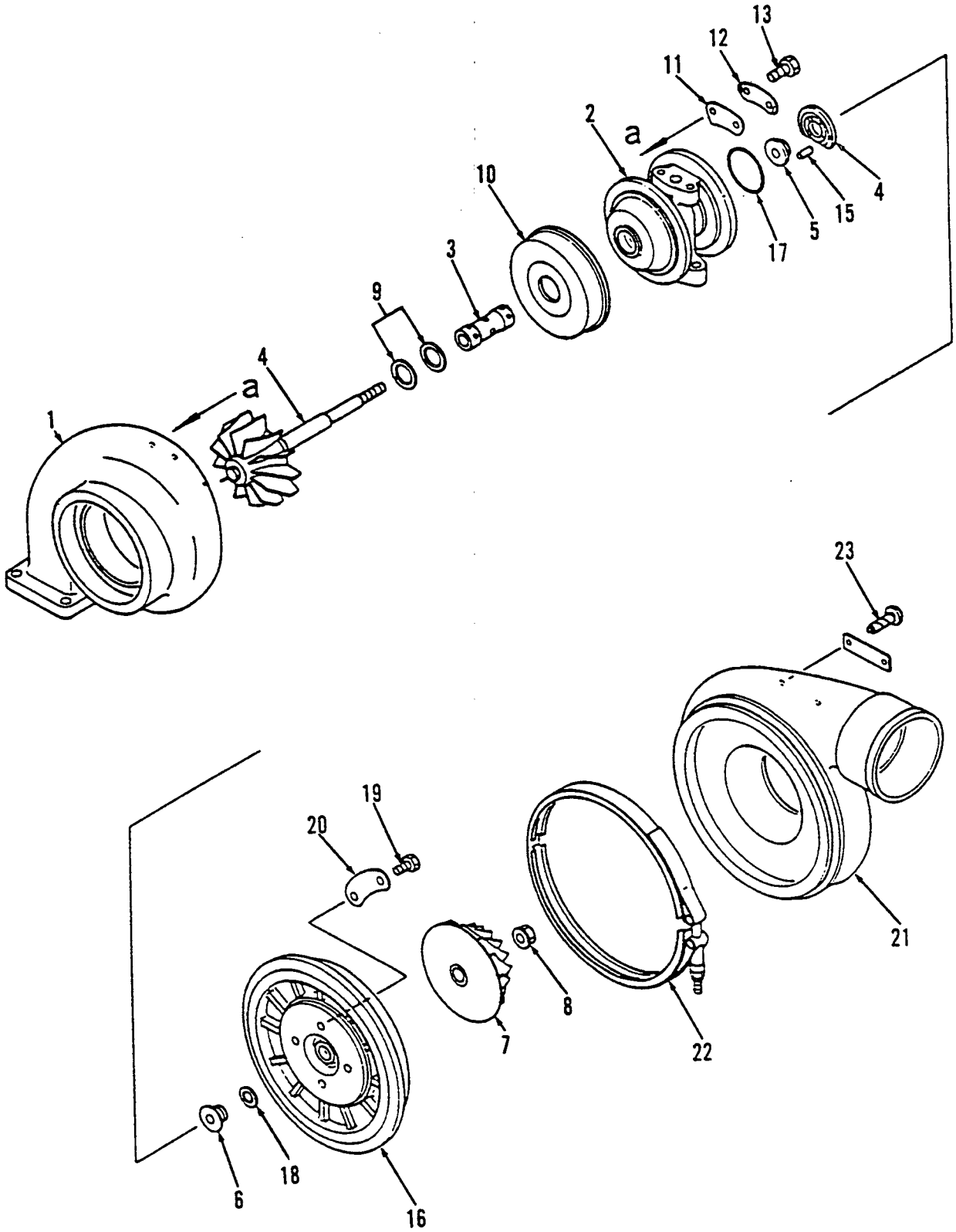

Turbocharger Components

REF NO.	PART NO.	QTY USED	PART DESCRIPTION
1	186-2066	1	Housing, Turbine
2	186-2049	1	Housing, Center
3	186-2050	1	Bearing, Journal
4	186-2065	1	Rotor, Turbine
5	186-2052	1	Collar, Thrust
6	186-2053	1	Flinger
7	186-2063	1	Impeller, Blower
8	186-2056	1	Nut, Lock
9	186-2054	2	Seal, O-Ring
10	186-2061	1	Shield, Heat
11	186-2058	4	Plate
12	186-2059	4	Washer, Lock
13	186-1680	8	Bolt
14	186-2051	1	Bearing, Thrust
15	186-1712	1	Pin, Dowel
16	186-2062	1	Plate, Diffuser
17	186-1728	1	Seal, O-Ring
18	186-2055	1	Seal, O-Ring
19	720-1035	4	Bolt
20	186-2060	2	Washer, Lock
21	186-2064	1	Housing, Blower
22	186-2057	1	Band, V
23	186-0753	2	Screw

Turbocharger Oil Piping

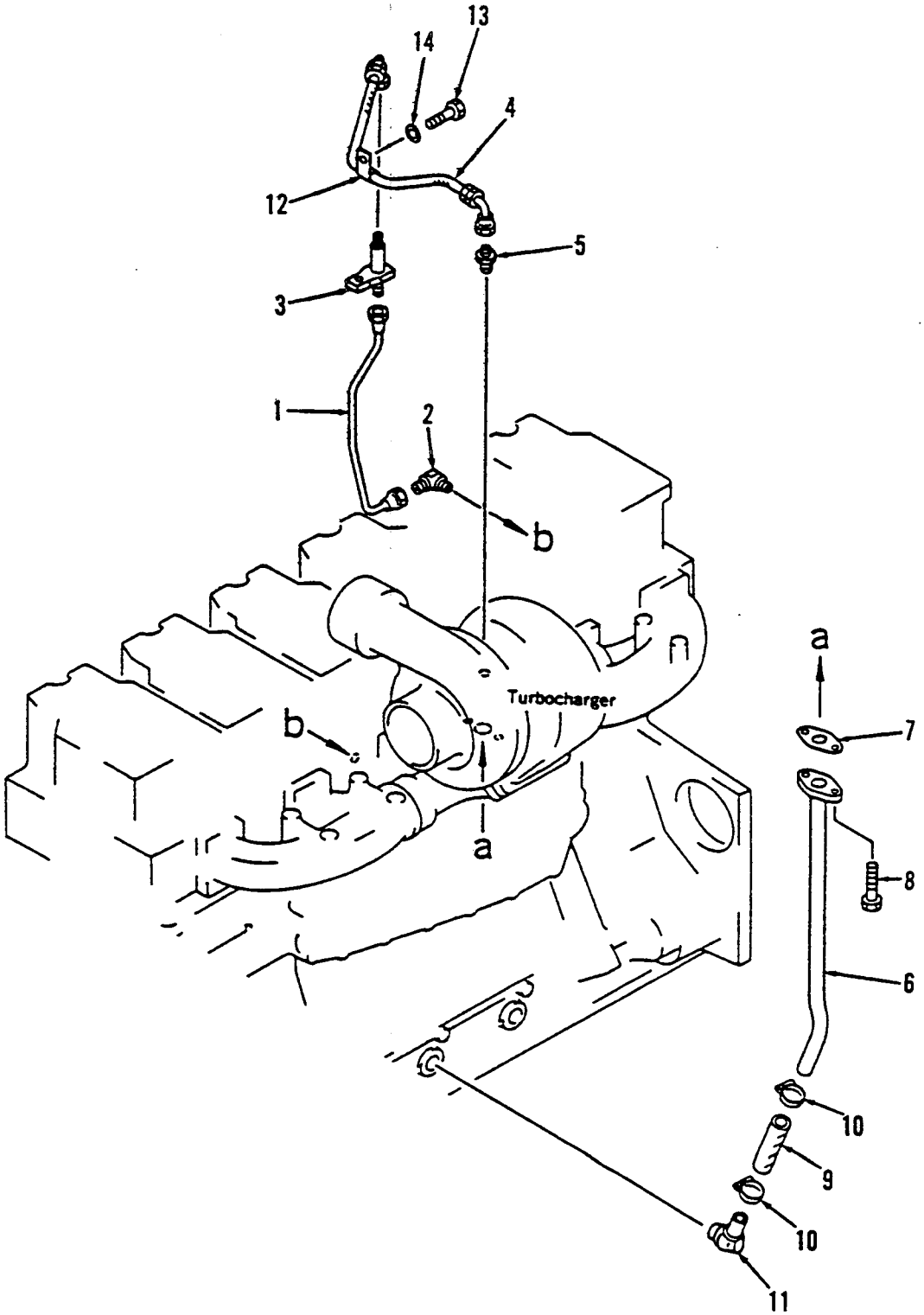

REF NO.	PART NO.	QTY USED	PART DESCRIPTION
1	186-1985	1	Tube, Supply
2	186-1747	1	Elbow
3	186-1986	1	Connector
4	186-1987	1	Hose
5	186-1746	1	Nipple
6	186-1984	1	Tube, Drain
7	186-1383	1	Gasket
8	186-1179	2	Bolt
9	186-1379	1	Hose
10	186-0168	2	Clamp
11	186-1384	1	Elbow
12	186-1755	1	Clip
13	186-1265	1	Bolt
14	186-0103	1	Washer

Exhaust System

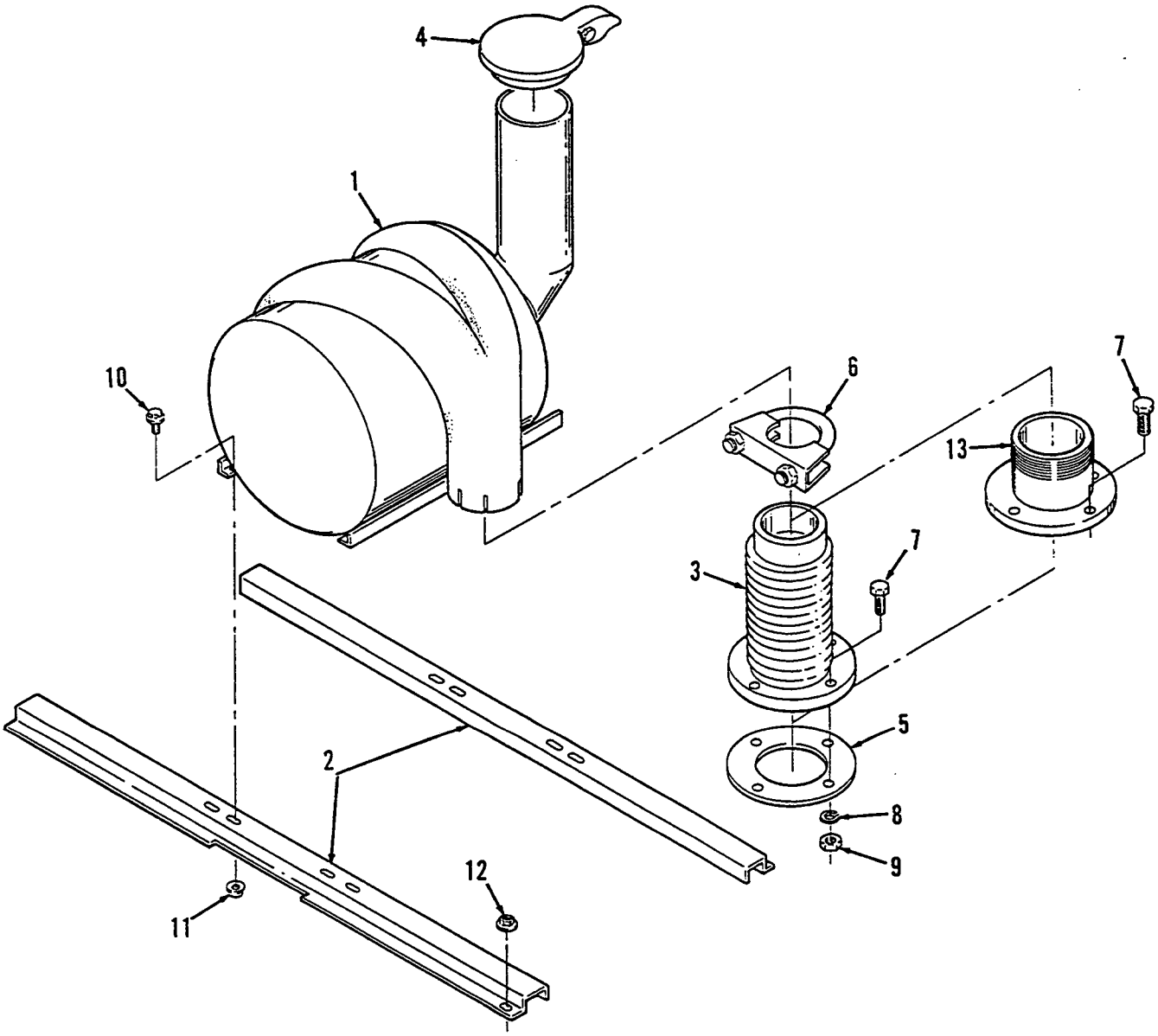

REF NO.	PART NO.	QTY USED	PART DESCRIPTION
1	155-2154	1	Silencer
2	155-2160	2	Bracket, Mounting - Silencer
3	155-2157	1	Adapter, Exhaust
4	155-2062-05	1	Cap, Rain
5	155-2158	1	Gasket, Exhaust
6	155-2159	1	Clamp, Muffler
7	800-0135	4	Screw, Cap - Hex Head (5/8 - 11 x 2-1/4")
8	850-0070	4	Washer, Lock (5/8)
9	862-0019	4	Nut, Hex (5/8 - 11)
10	821-0029	4	Screw, Lock (3/8 - 16 x 3/4")
11	870-0281	4	Nut, Lock (3/8 - 16)
12	870-0257	4	Nut, Lock (5/16 - 18)
13	155-2161	1	Adapter, Exhaust (Used on Gen Sets Without A Silencer)

Air Intake Manifold, And After Cooler

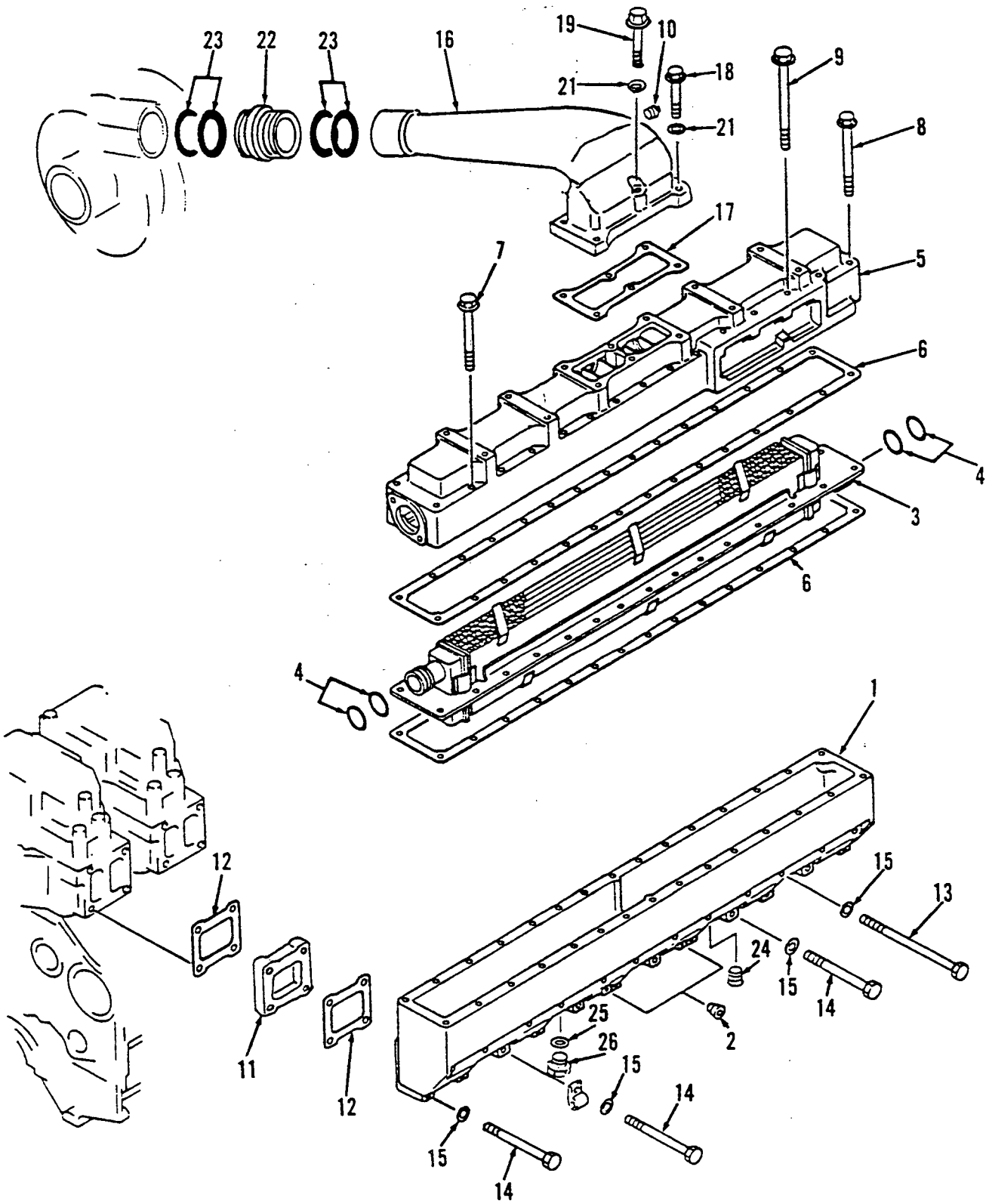

Air Intake Manifold, And After Cooler

REF NO.	PART NO.	QTY USED	PART DESCRIPTION
1	186-2022	1	Manifold, Intake
2	186-0156	2	Plug
3	186-2031	1	Core
4	186-2033	4	Seal, O-Ring
5	186-2023	1	Cover
6	186-2025	2	Gasket
7	186-1693	22	Bolt
8	186-1696	4	Bolt
9	186-1693	4	Bolt
10	186-0151	1	Plug
11	186-2027	6	Spacer
12	186-1783	12	Gasket
13	186-1180	12	Bolt
14	186-1685	12	Bolt
15	186-0103	24	Washer
16	186-2024	1	Connector
17	186-2026	1	Gasket
18	186-1285	5	Bolt
19	186-1159	1	Bolt
21	186-0103	6	Washer
22	186-1949	1	Connector
23	186-1711	4	Seal, O-Ring
24	186-0154	1	Plug
25	186-1216	1	Plug
26	186-1735	1	Gasket

Fuel Injection Pump, And Piping

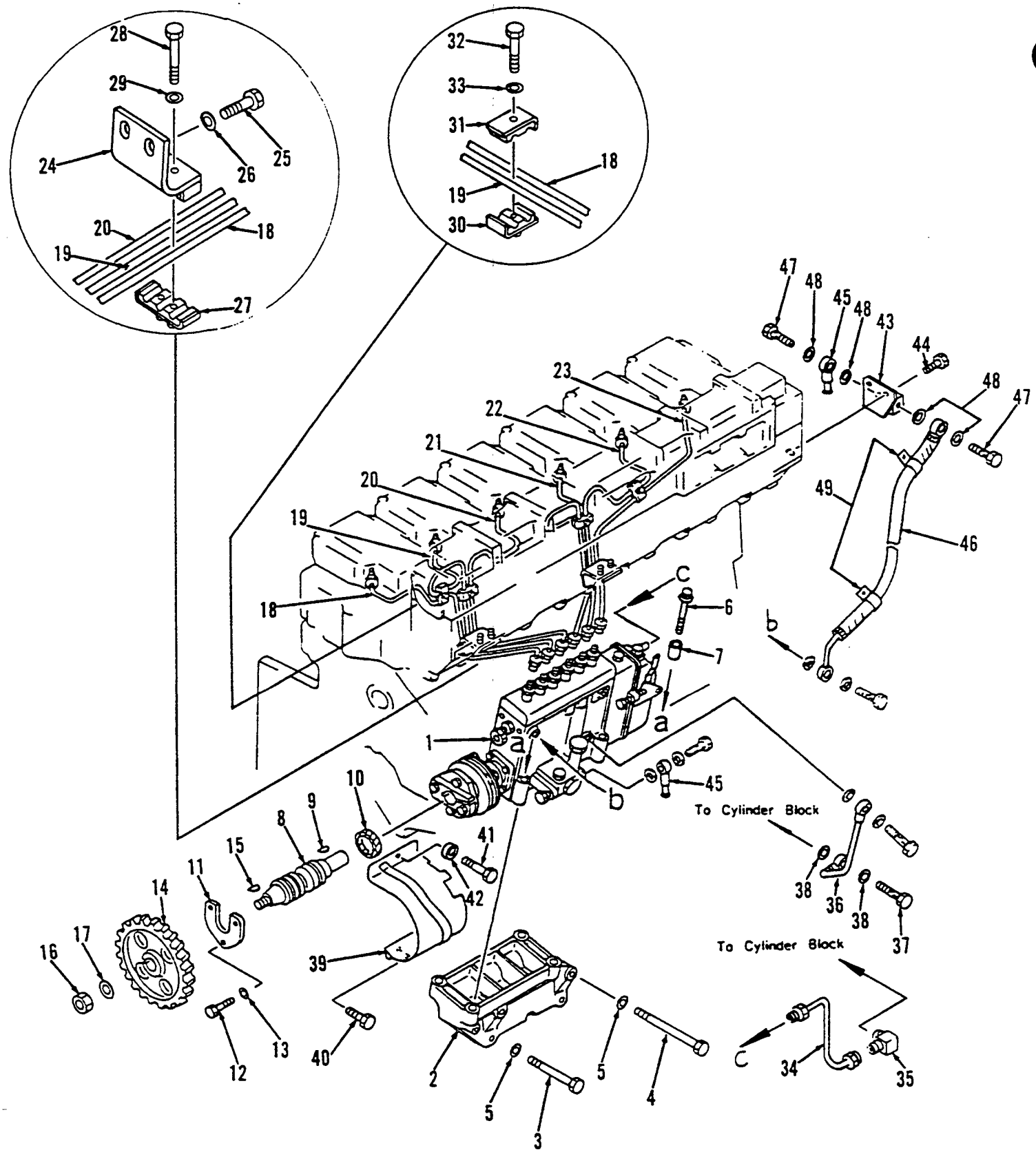

Fuel Injection Pump, And Piping

REF NO.	PART NO.	QTY USED	PART DESCRIPTION
1	186-2039	1	Pump, Injection - Fuel (See Separate Page For Components)
2	186-1966	1	Bracket
3	186-1675	2	Bolt
4	186-1677	2	Bolt
5	186-0104	4	Washer
6	186-1413	4	Bolt
7	186-1231	2	Ring, Dowel
8	186-2041	1	Shaft
9	186-1414	1	Key
10	186-1927	1	Seal, Oil
11	186-1925	1	Plate, Thrust
12	720-1035	3	Bolt
13	186-0101	3	Washer
14	186-2073	1	Gear
15	186-1414	1	Key
16	186-1701	1	Nut
17	186-1411	1	Washer
18	186-2009	1	Line, Injection - Fuel (No 1)
19	186-2010	1	Line, Injection - Fuel (No 2)
20	186-2011	1	Line, Injection - Fuel (No 3)
21	186-2012	1	Line, Injection - Fuel (No 4)
22	186-2013	1	Line, Injection - Fuel (No 5)
23	186-2014	1	Line, Injection - Fuel (No 6)
24	186-1931	2	Clamp
25	186-1671	4	Bolt
26	186-0102	4	Washer
27	186-1932	2	Clamp
28	186-1670	4	Bolt
29	186-1703	4	Washer
30	186-1775	4	Clamp
31	186-1776	4	Clamp
32	186-1669	4	Bolt
33	186-1703	4	Washer
34	186-2043	1	Tube, Supply
35	186-1757	1	Elbow
36	186-2016	1	Tube, Drain
37	186-0161	1	Bolt, Joint
38	186-0147	2	Gasket
39	186-1928	1	Cover
40	186-1255	2	Bolt
41	186-1265	1	Bolt
42	186-1774	1	Washer
43	186-2045	1	Adapter
44	186-1265	2	Bolt
45	186-1436	2	Joint
46	186-2042	1	Hose
47	186-0161	2	Bolt, Joint
48	186-0147	4	Gasket
49	186-1766	2	Clamp

Fuel Injection Pump Components

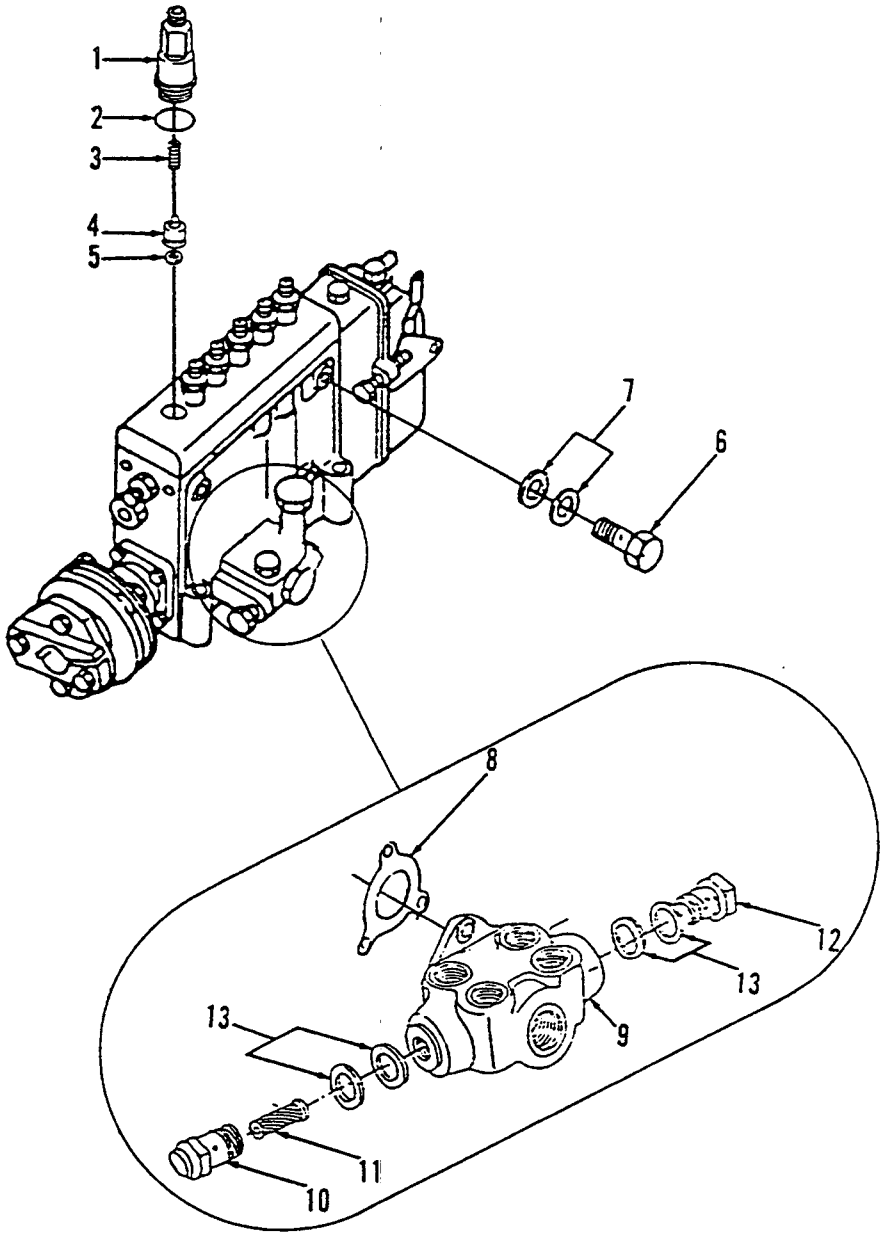

REF NO.	PART NO.	QTY USED	PART DESCRIPTION
1	186-2078	6	Holder, Delivery
2	186-2079	6	Seal, O-Ring - Holder
3	186-2080	6	Spring, Delivery
4	186-2081	6	Valve, Delivery
5	186-2082	6	Washer, Copper Plated
6	186-2083	2	Screw
7	186-2084	6	Washer
8	186-2089	1	Gasket, Pump - Feed
9	186-2085	1	Pump Assembly, Feed (Includes Parts Marked *)
10	186-2086	1	*Screw
11	186-2087	1	*Filter, Fuel
12	186-2083	1	*Screw
13	186-2088	4	*Washer, Seal

* Parts included in 186-2085 Feed Pump Assembly.

Fuel Filter, And Mounting

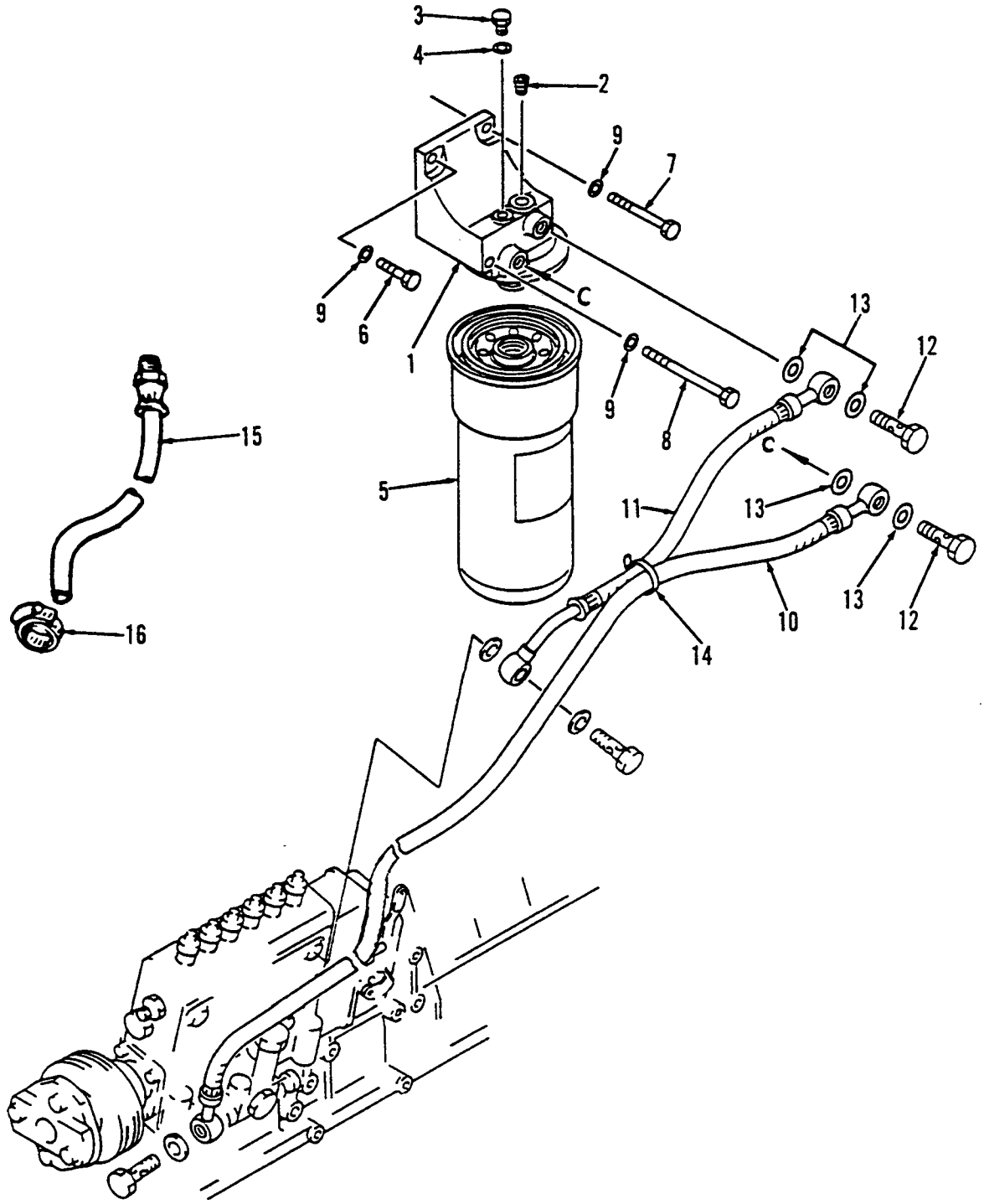

REF NO.	PART NO.	QTY USED	PART DESCRIPTION
1	186-1933	1	Head
2	186-0154	1	Plug
3	186-0522	1	Plug
4	186-0144	1	Gasket
5	186-1759	1	Filter, Fuel
6	186-1266	1	Bolt
7	186-1264	1	Bolt
8	186-1181	2	Bolt
9	186-0103	4	Washer
10	186-1748	1	Hose, Inlet
11	186-1929	1	Hose, Outlet
12	186-0161	2	Bolt, Joint
13	186-0147	4	Gasket
14	186-1753	1	Band
15	501-0501	2	Line, Fuel - Flex
16	503-0170	2	Clamp, Hose

Starting Motor, And Mounting

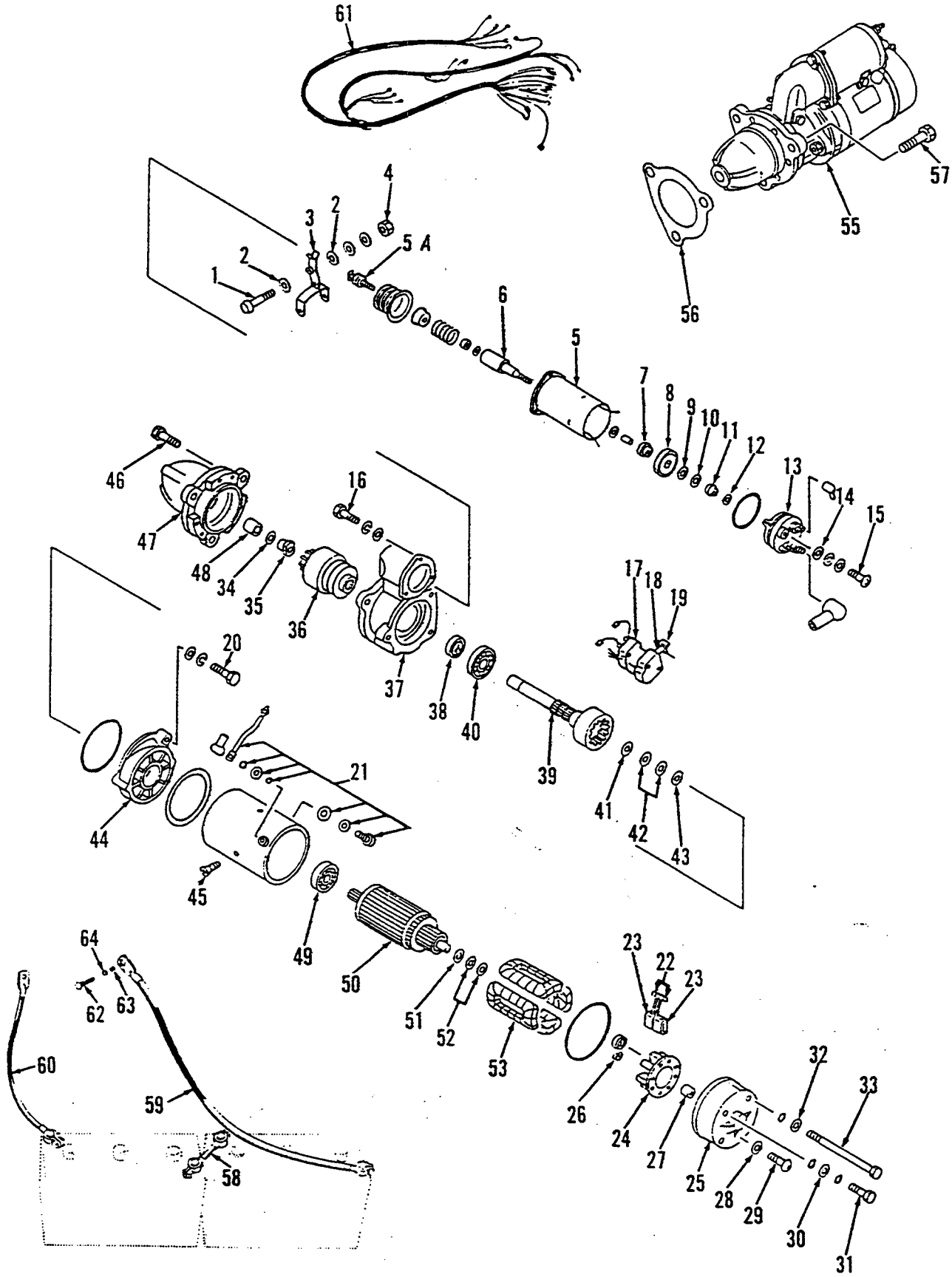

Starting Motor, And Mounting

REF NO.	PART NO.	QTY USED	PART DESCRIPTION
1	186-1634	1	*Pin, Lever
2	186-0030	2	*Washer, Seal
3	186-1649	1	*Lever, Shift
4	186-0599	1	*Nut
5	186-0476	1	*Switch Assembly, Magnetic (Includes Parts Marked +)
6	186-0601	1	+*Plunger
7	186-0602	1	+*Bushing, Insulate
8	186-0603	1	+*Contactor, Moving
9	186-0604	1	+*Washer, Insulate
10	186-0605	2	+*Washer
11	186-0606	1	+*Holder
12	186-0607	2	+*Ring, Clip
13	186-0609	1	+*Terminal Assembly
14	186-1632	2	+*Washer, Seal
15	186-1510	2	+*Screw
16	186-0613	3	*Bolt
17	186-1635	1	*Switch, Relay - Safety (Includes Bolt, and Holder)
18	186-1629	1	*Bolt
19	186-0614	1	*Holder
20	186-0615	3	*Bolt
21	186-1663	1	*Terminal Assembly
22	186-0618	4	*Plate
23	186-0480	4	*Brush
24	186-0619	1	*Holder, Brush
25	186-0620	1	*Bracket
26	186-0621	4	*Spring, Brush
27	186-0482	1	*Bearing
28	186-0610	1	*Washer, Seal
29	186-1633	1	*Screw
30	186-0625	2	*Washer
31	186-0626	2	*Bolt
32	186-0628	2	*Washer
33	186-1509	2	*Bolt
34	186-0630	1	*Ring, Clip
35	186-0631	1	*Stopper, Pinion
36	186-0479	1	*Clutch Assembly, Running - Over
37	186-0632	1	*Bracket, Center (Includes Oil Seal)
38	186-0633	1	*Seal, Oil
39	186-0634	1	*Shaft Assembly (Includes Ball Bearing)
40	186-0477	1	*Bearing, Ball
41	186-0054	1	*Washer
42	186-0055	2	*Washer
43	186-0637	1	*Washer, Insulate
44	186-0639	1	*Bracket, Center
45	186-0641	4	*Screw, Dish
46	186-0029	6	*Bolt
47	186-0643	1	*Bracket, Front (Includes Bearing)
48	186-0483	1	*Bearing
49	186-0478	1	*Bearing, Ball
50	186-0644	1	*Armature
51	186-0645	1	*Washer
52	186-0646	2	*Washer
53	186-0647	1	*Coil, Field
54	186-0481	1	*Seal Assembly (Not Illustrated)
55	186-1764	1	Motor Assembly, Starting (Includes Parts Marked *)
56	186-1503	1	Gasket
57	186-1501	3	Bolt
58	416-0871	1	Cable, Battery (33")
59	416-0619	1	Cable, Battery (18")
60	416-0672	1	Cable, Battery (29")
61	338-1951	1	Harness, Wiring - Engine
62	718-1053	1	Screw, Cap - Hex Head (M10 x 1.5 x 20mm)
63	850-2010	1	Washer, Lock (M10)
64	856-0010	1	Washer, Lock - EIT (M10)
65	186-0600	1	+*Screw

* Parts included in 186-1764 Starting Motor Assembly.
\+ Parts included in 186-0476 Magnetic Switch Assembly.

Solenoid, And Mounting

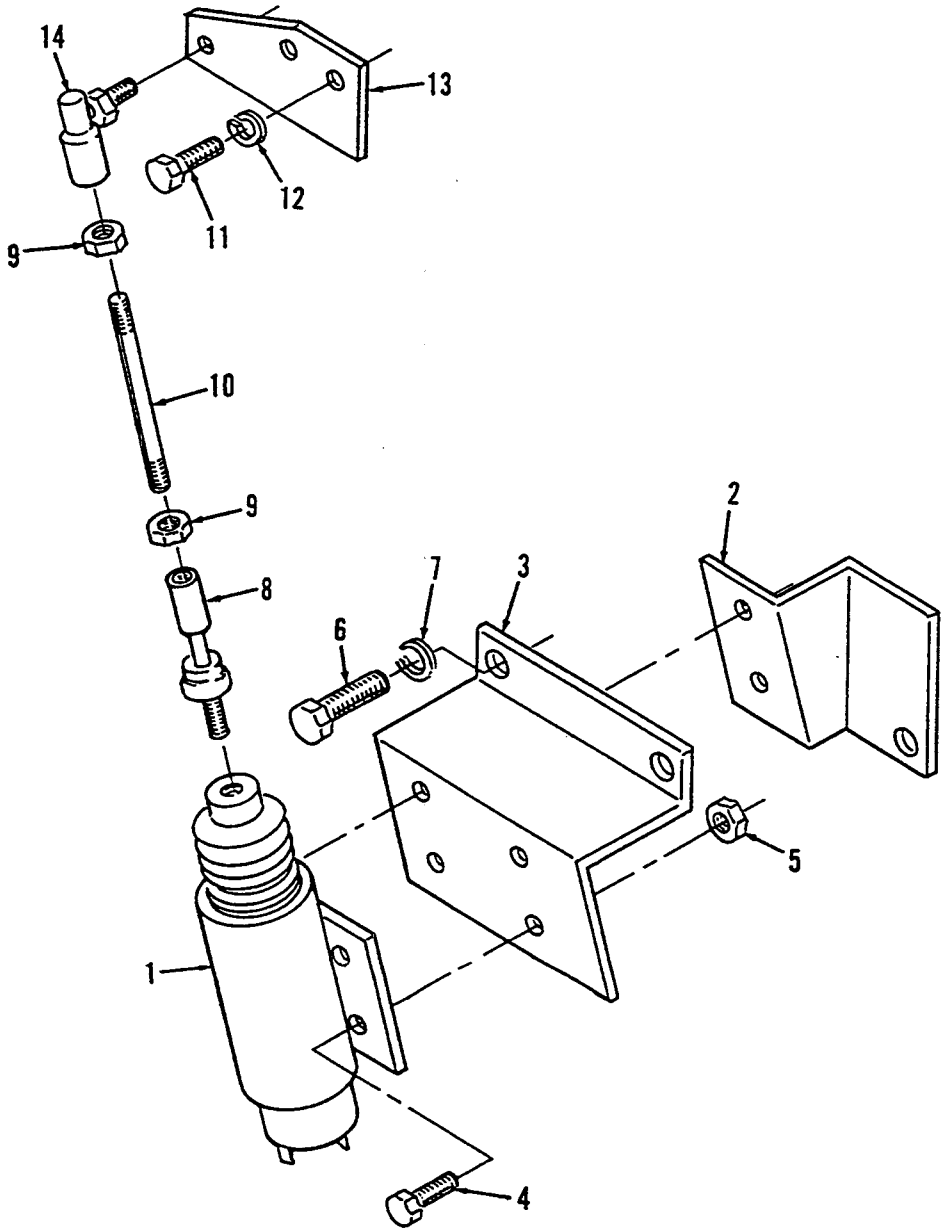

REF NO.	PART NO.	QTY USED	PART DESCRIPTION	REF NO.	PART NO.	QTY USED	PART DESCRIPTION
1	307-2554	1	Solenoid, Start/Stop	8	150-1733	1	Joint, Ball
2	307-2557	1	Bracket, Mounting - Solenoid	9	115-0025	3	Nut (1/4 - 20)
3	307-2556	1	Bracket, Mounting - Solenoid	10	520-0964	1	Stud
4	821-0018	4	Screw, Lock (1/4 - 20 x 5/8")	11	718-1020	2	Screw, Cap - Hex Head (M6 x 16mm)
5	870-0212	4	Nut, Lock (1/4 - 20)	12	850-2006	2	Washer, Lock (M6)
6	718-1053	3	Screw, Cap - Hex Head (M10 x 20mm)	13	307-2555	1	Arm, Solenoid
7	850-2010	3	Washer, Lock (M10)	14	150-1995	1	Joint, Ball

Alternator, And Mounting

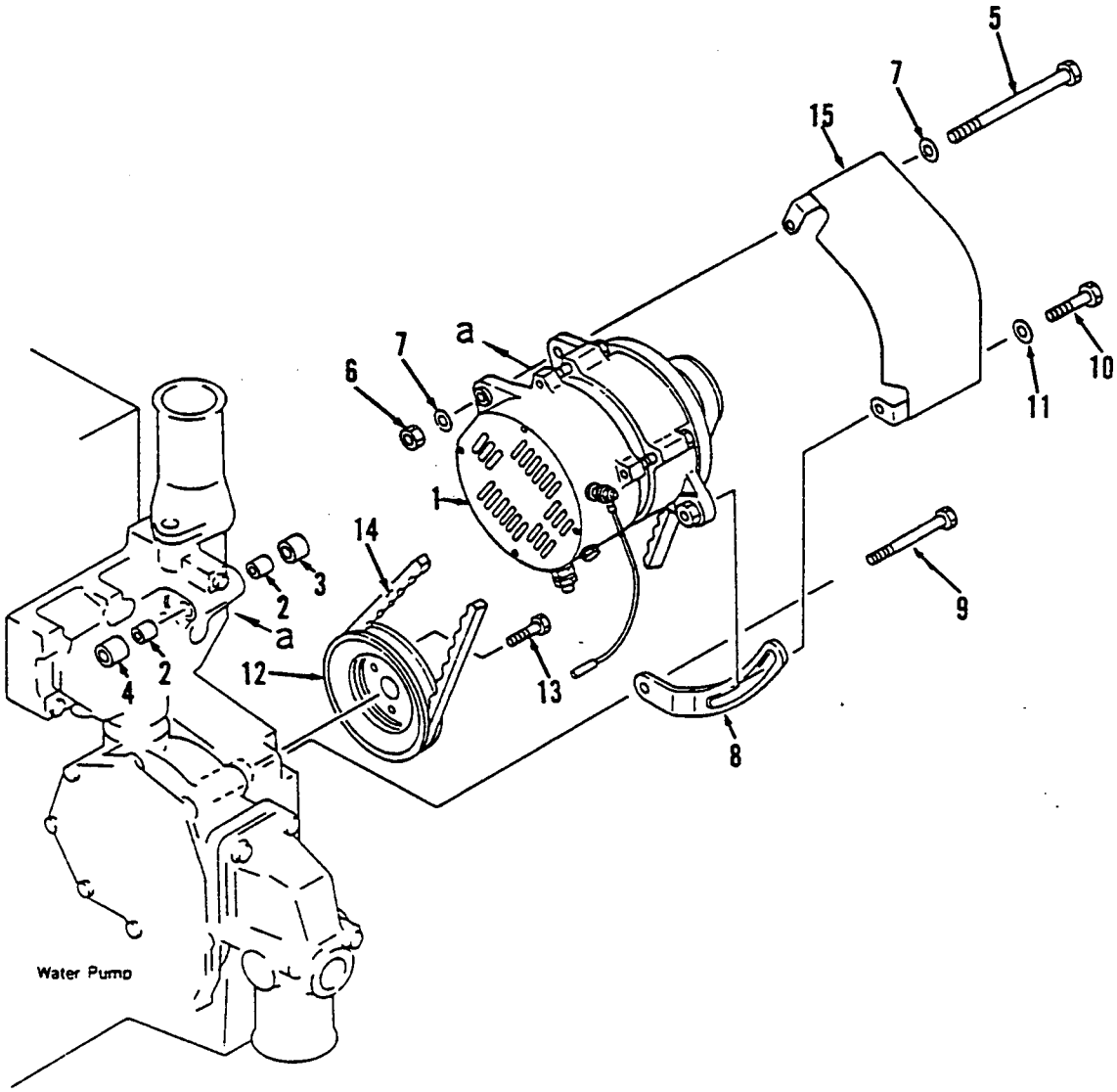

REF NO.	PART NO.	QTY USED	PART DESCRIPTION	REF NO.	PART NO.	QTY USED	PART DESCRIPTION
1	186-2074	1	Alternator Assembly (See Separate Page For Components)	8	186-2017	1	Plate, Adjust
2	186-1920	2	Pin	9	186-1267	1	Bolt
3	186-1758	1	Spacer	10	186-0085	1	Bolt
4	186-1771	1	Spacer	11	186-0109	1	Washer
5	186-1768	1	Bolt	12	186-1935	1	Pulley
6	186-1708	1	Nut	13	186-1671	3	Bolt
7	186-1706	2	Washer	14	186-1763	1	Belt, V
				15	186-2018	1	Cover

Alternator Components

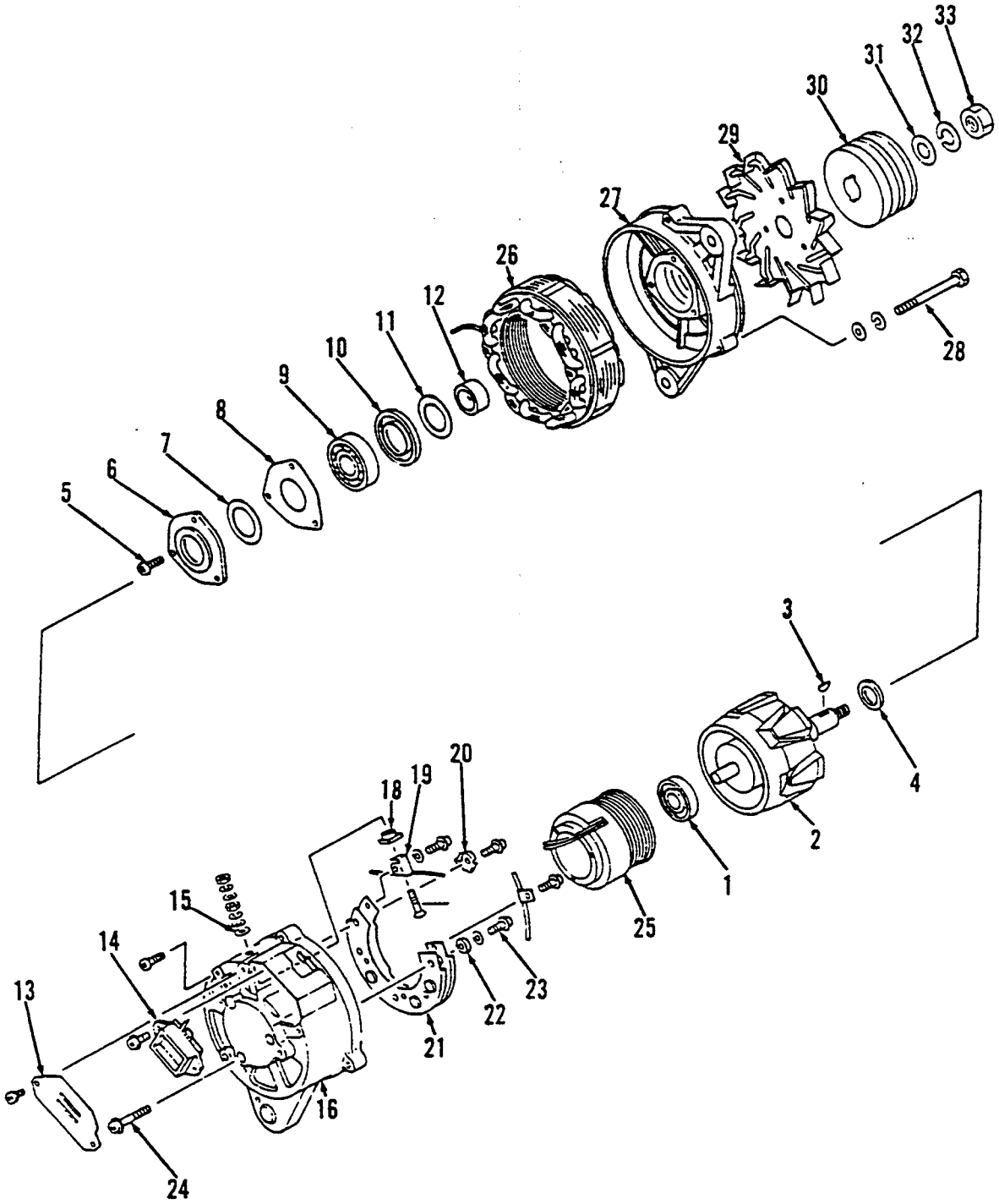

Alternator Components

REF NO.	PART NO.	QTY USED	PART DESCRIPTION
1	186-1647	1	Bearing, Ball
2	186-1656	1	Rotor Assembly
3	186-1645	1	Key, Woodruff
4	186-1651	1	Collar
5	186-1642	3	Screw
6	186-1650	1	Retainer
7	186-1655	1	Packing
8	186-1653	1	Retainer
9	186-1646	1	Bearing, Ball
10	186-1654	1	Retainer
11	186-1648	1	Packing
12	186-1652	1	Collar
13	186-1659	1	Cover
14	186-1664	1	Regulator Assembly
15	186-1662	1	Washer, Insulate
16	186-1640	1	Bracket, Rear
17	186-1636	1	Bolt (Battery Terminal)
18	186-0935	1	Bushing, Insulate
19	186-1661	1	Bar, Connect
20	186-1660	1	Terminal
21	186-1641	1	Rectifier
22	186-0929	2	Plate, Insulate
23	186-1627	3	Screw
24	186-1628	3	Screw
25	186-1637	1	Coil, Field
26	186-1638	1	Stator
27	186-1639	1	Bracket, Front
28	186-1630	3	Bolt
29	186-1658	1	Fan
30	186-1657	1	Pulley
31	186-1643	1	Washer
32	186-1644	1	Washer, Spring
33	186-1631	1	Nut

Cooling Fan, And Mounting

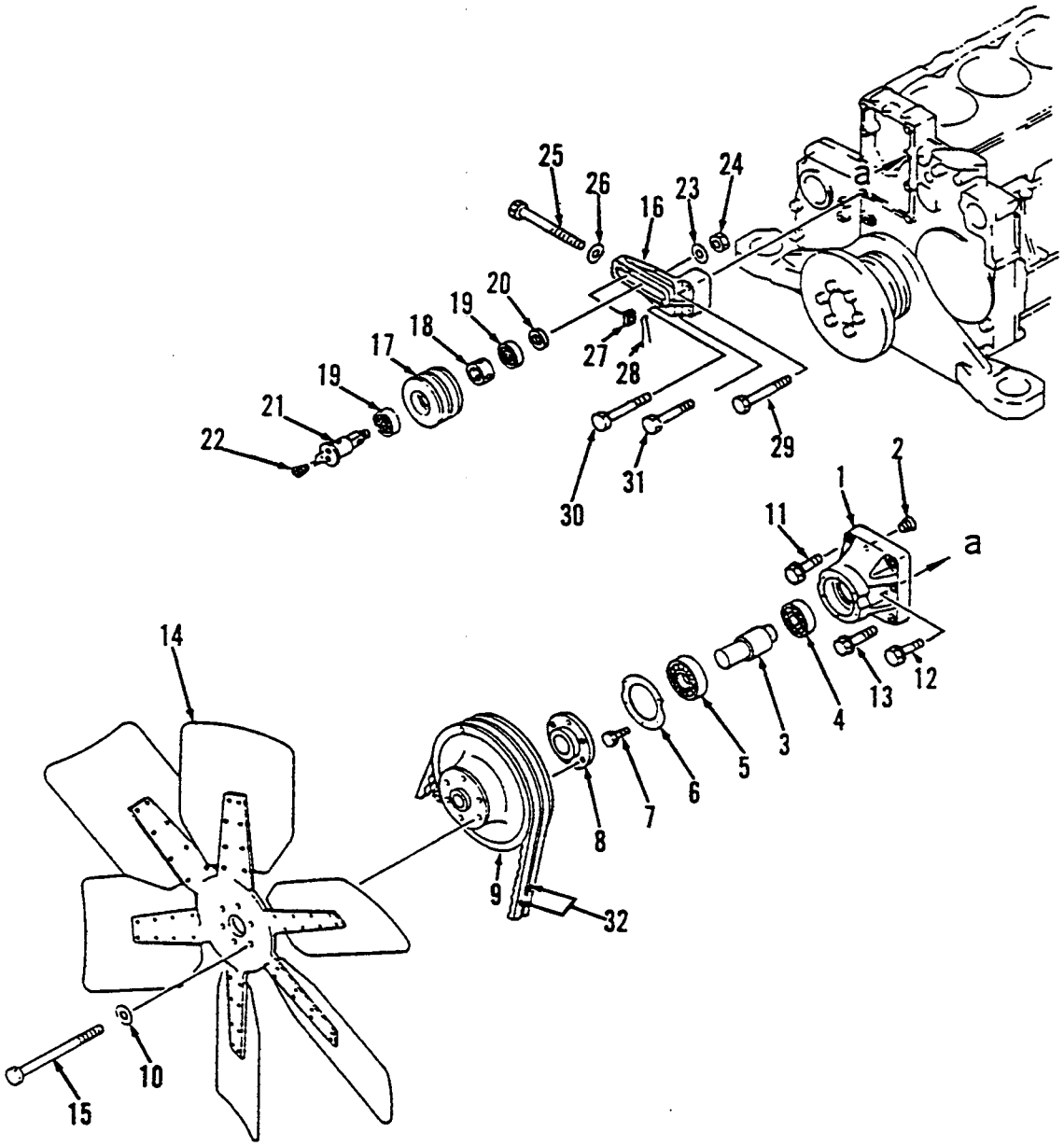

Cooling Fan, And Mounting

REF NO.	PART NO.	QTY USED	PART DESCRIPTION
	186-1997	1	Pulley Assembly, Fan (Includes Parts Marked *)
1	186-1995	1	*Bracket
2	186-0156	2	*Plug
3	186-1996	1	*Shaft
4	186-1720	1	*Bearing, Ball
5	186-1721	1	*Bearing, Ball
6	186-1994	1	*Plate
7	720-1035	6	*Bolt
8	186-1999	1	*Adapter
9	186-1998	1	Pulley, Fan
10	186-1707	6	Washer
11	186-1695	2	Bolt
12	186-1697	3	Bolt
13	186-1694	1	Bolt
14	186-1761	1	Fan, Cooling
15	720-1075	6	Bolt
16	186-2001	1	Bracket
17	186-2000	1	Pulley, Tension
18	186-2006	1	Spacer
19	186-1723	2	Bearing, Ball
20	186-2008	1	Spacer
21	186-2002	1	Shaft
22	186-1740	2	Plug
23	186-2007	1	Plate
24	186-1699	1	Nut
25	186-2003	1	Bolt, Adjusting
26	186-2004	1	Washer
27	186-2005	1	Nut
28	186-0128	1	Pin, Cotter
29	186-1688	1	Bolt
30	186-1686	1	Bolt
31	186-1676	1	Bolt
32	186-1716	1	Belt Set, V

* Parts included in 186-1997 Fan Pulley Assembly.

Water Pump

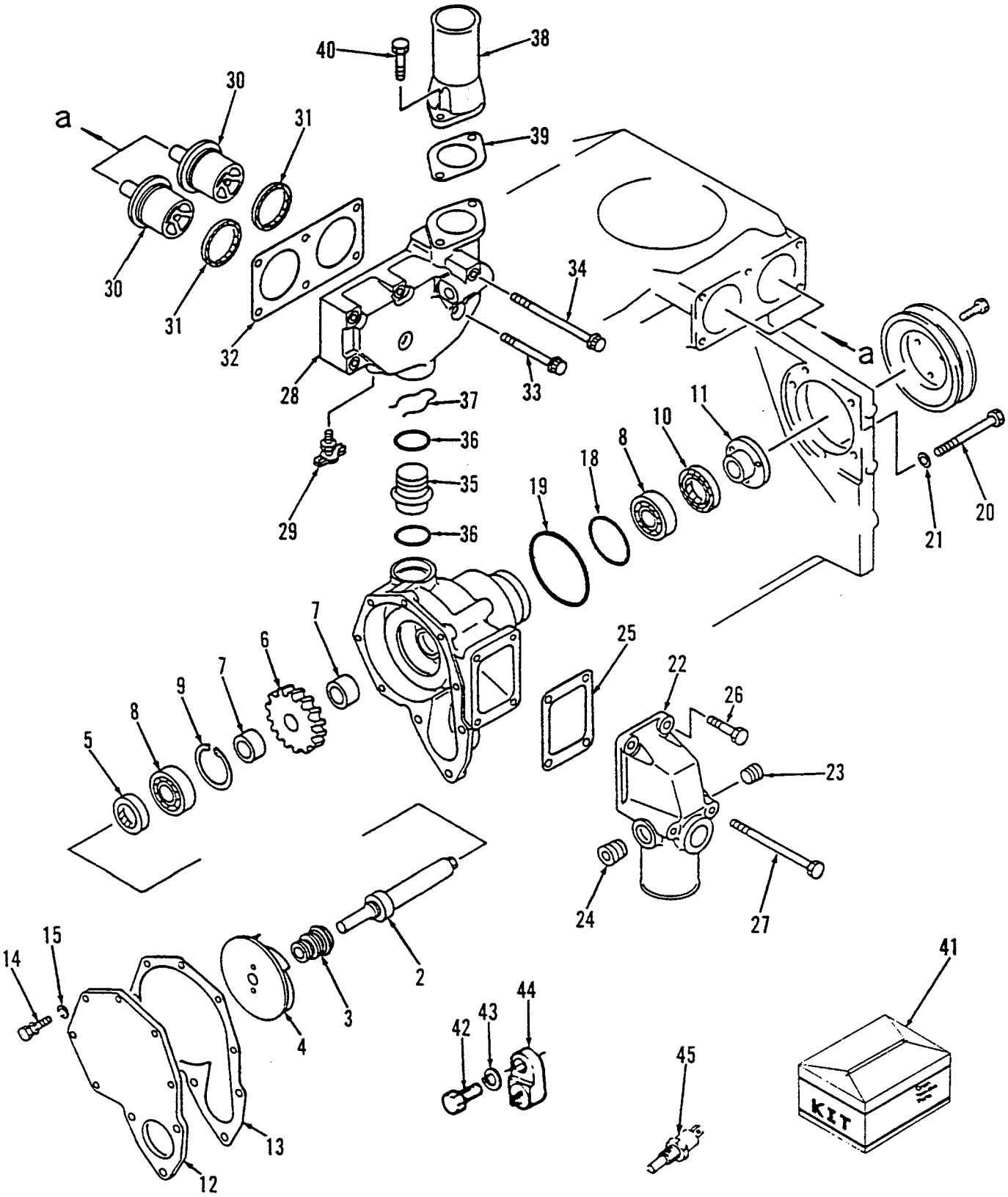
40
38
30
a
31
39
30
31
32
34
28
33
a
37
36
35
36
29
11
10
8
18
19
20
21
7
6
7
9
8
5
25
22
26
23
24
27
15
14
2
3
4
44
43
42
41
45
13
12
KIT

Water Pump

REF NO.	PART NO.	QTY USED	PART DESCRIPTION
	186-1988	1	Pump Assembly, Water (Includes Parts Marked *)
2	186-1992	1	*Shaft
3	186-0404	1	*Seal, Water
4	186-1991	1	*Impeller
5	186-1900	1	*Seal, Oil
6	186-1899	1	*Gear
7	186-1898	2	*Spacer
8	186-1722	2	*Bearing, Ball
9	186-1715	1	*Ring, Snap
10	186-1901	1	*Seal, Oil
11	186-1897	1	*Sleeve
12	186-1989	1	*Cover
13	186-1990	1	*Gasket
14	186-0329	6	*Bolt
15	186-0095	6	*Washer, Spring
18	186-0136	1	Seal, O-Ring
19	186-1460	1	Seal, O-Ring
20	186-1447	3	Bolt
21	186-0103	3	Washer
22	186-1908	1	Connector
23	186-1709	2	Plug
24	186-1709	1	Plug
25	186-1909	1	Gasket
26	186-0501	2	Bolt
27	186-1683	2	Bolt
28	186-1915	1	Housing, Thermostat
29	186-0517	1	Cock
30	186-1760	2	Thermostat
31	186-2070	2	Seal
32	186-1916	1	Gasket
33	186-1200	5	Bolt
34	186-1937	1	Bolt
35	186-1918	1	Tube
36	186-1710	2	Seal, O-Ring
37	186-1919	1	Spring
38	186-1910	1	Connector
39	186-1917	1	Gasket
40	186-1268	2	Bolt
41	186-2077	1	Gasket Kit, Pump - Water
42	718-1039	1	Screw, Cap - Hex Head (M8 x 1.25 x 35mm)
43	850-2008	1	Washer, Lock (M8)
44	309-0269	1	Sender, Temperature - Lo Engine
45	309-0521	1	Thermostat, Temperature - Pre Water

* Parts included in 186-1988 Water Pump Assembly.

Water Piping

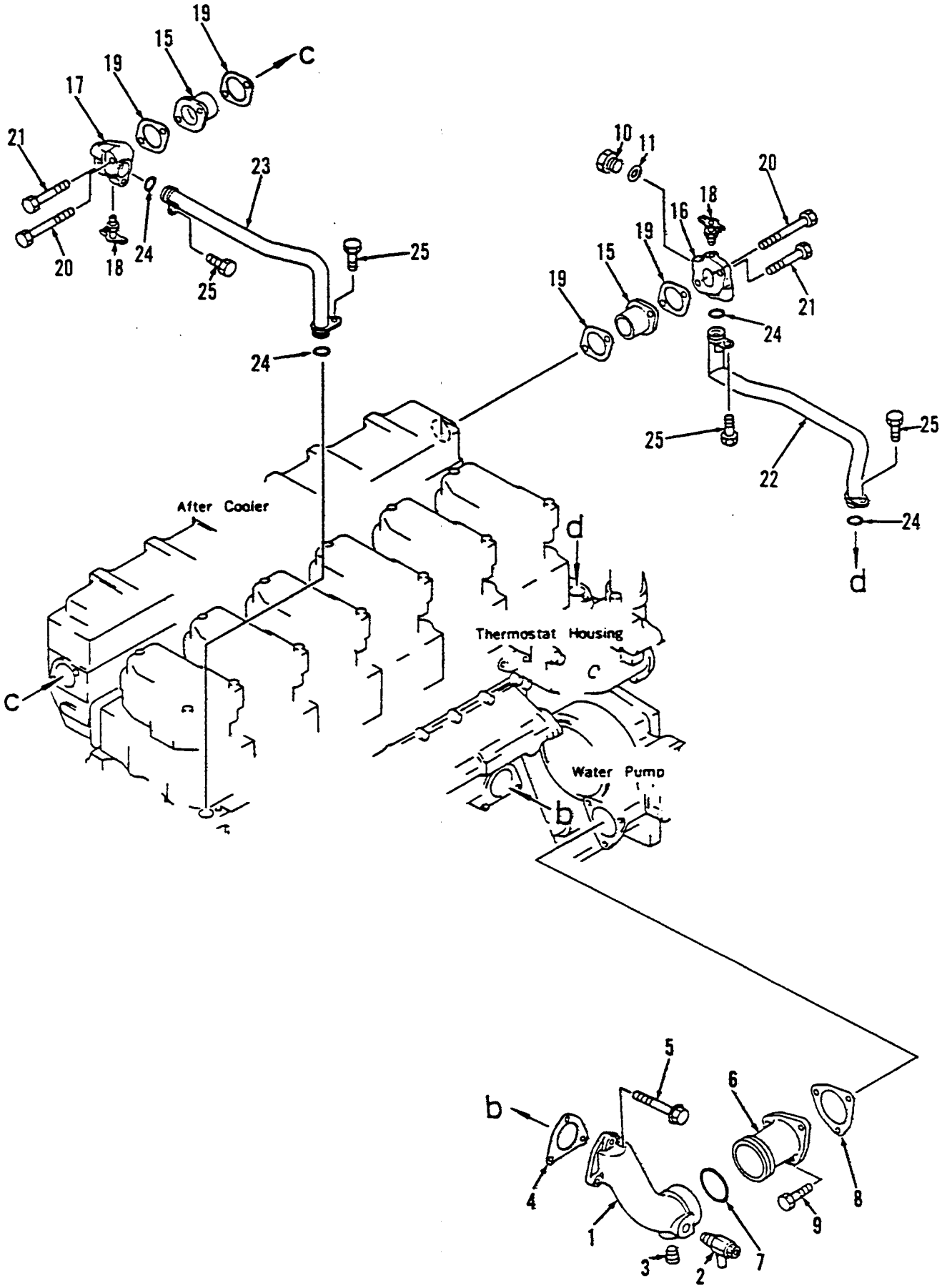

Water Piping

REF NO.	PART NO.	QTY USED	PART DESCRIPTION
1	186-1912	1	Elbow
2	186-1752	1	Valve
3	186-0155	1	Plug
4	186-1914	1	Gasket
5	186-1936	3	Bolt
6	186-1911	1	Tube
7	186-1726	1	Seal, O-Ring
8	186-1913	1	Gasket
9	186-1266	3	Bolt
10	186-1738	1	Plug
11	186-0147	1	Gasket
15	186-2037	2	Connector
16	186-2035	1	Connector
17	186-2036	1	Connector
18	186-0517	2	Cock
19	186-2038	4	Gasket
20	186-1388	2	Bolt
21	186-1474	2	Bolt
22	186-2034	1	Tube
23	186-2032	1	Tube
24	186-1725	4	Seal, O-Ring
25	186-1255	4	Bolt

Cooling System (Standard)

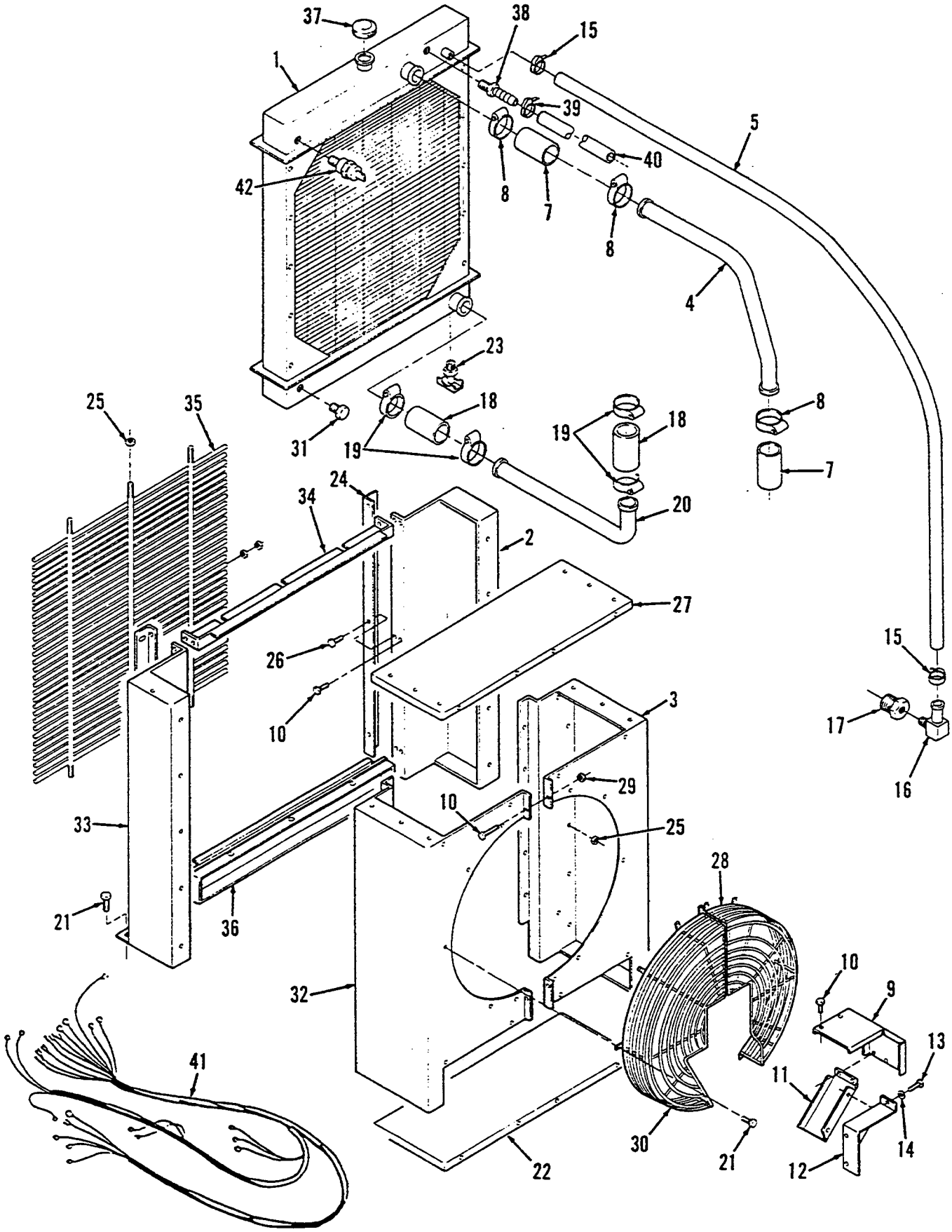

Cooling System
(Standard)

REF NO.	PART NO.	QTY USED	PART DESCRIPTION
1	130-2862	1	Radiator
2	130-2876-01	1	Guard, Radiator (Left Hand)
3	130-2867-01	1	Wrapper, Shroud - Fan (Left Hand)
4	130-2893	1	Tube, Inlet - Radiator
5	503-1467	1	Hose
6	332-1389	3	Cable, Tie
7	503-1380-01	2	Hose, Radiator
8	503-0998	4	Clamp, Hose
9	191-1755	1	Wrapper, Guard - Alternator
10	821-0018	19	Screw, Lock - Flange (1/4 - 20 x 5/8")
11	191-1757	1	Guard, Belt - Alternator
12	191-1756	1	Support, Guard - Alternator
13	718-1052	2	Screw, Cap - Hex Head (M10 x 1.5 x 16mm)
14	850-2010	2	Washer, Lock (M10)
15	503-0189	2	Clamp, Hose
16	502-0999	1	Elbow, Hose - 90°
17	505-1365	1	Bushing, Reducer
18	503-1460	2	Hose, Radiator
19	503-0868	4	Clamp, Hose
20	130-2861	1	Tube, Outlet - Radiator
21	821-0029	32	Screw, Lock (3/8 - 16 x 3/4")
22	130-2868	1	Shroud, Fan - Bottom
23	504-0028	1	Cock, Drain
24	130-2870	2	Bracket
25	870-0281	19	Nut, Lock (3/8 - 16)
26	821-0028	26	Screw, Lock (3/8 - 16 x 1/2")
27	130-2869	1	Shroud, Fan - Top
28	130-2825-01	1	Guar, Fan (Left Hand)
29	870-0212	8	Nut, Lock - Flange (1/4 - 20)
30	130-2825-02	1	Guard, Fan (Right Hand)
31	502-0153	3	Plug, Pipe - Hex
32	130-2867-02	1	Wrapper, Shroud - Fan (Right Hand)
33	130-2876-02	1	Guard, Radiator (Right Hand)
34	130-2874	1	Bracket, Mounting - Grille
35	130-2875	1	Grille
36	130-2873	1	Support, Grille
37	130-0449	1	Cap, Radiator
38	502-0996	1	Connector, Hose - Barbed
39	503-1133	2	Clamp, Hose
40	503-0304	1	Hose
41	338-2010	1	Harness, Wiring - Lo Coolant Level
42	193-0322	1	Sender, Level - Lo Coolant

Cooling System
(Hi Temperature)

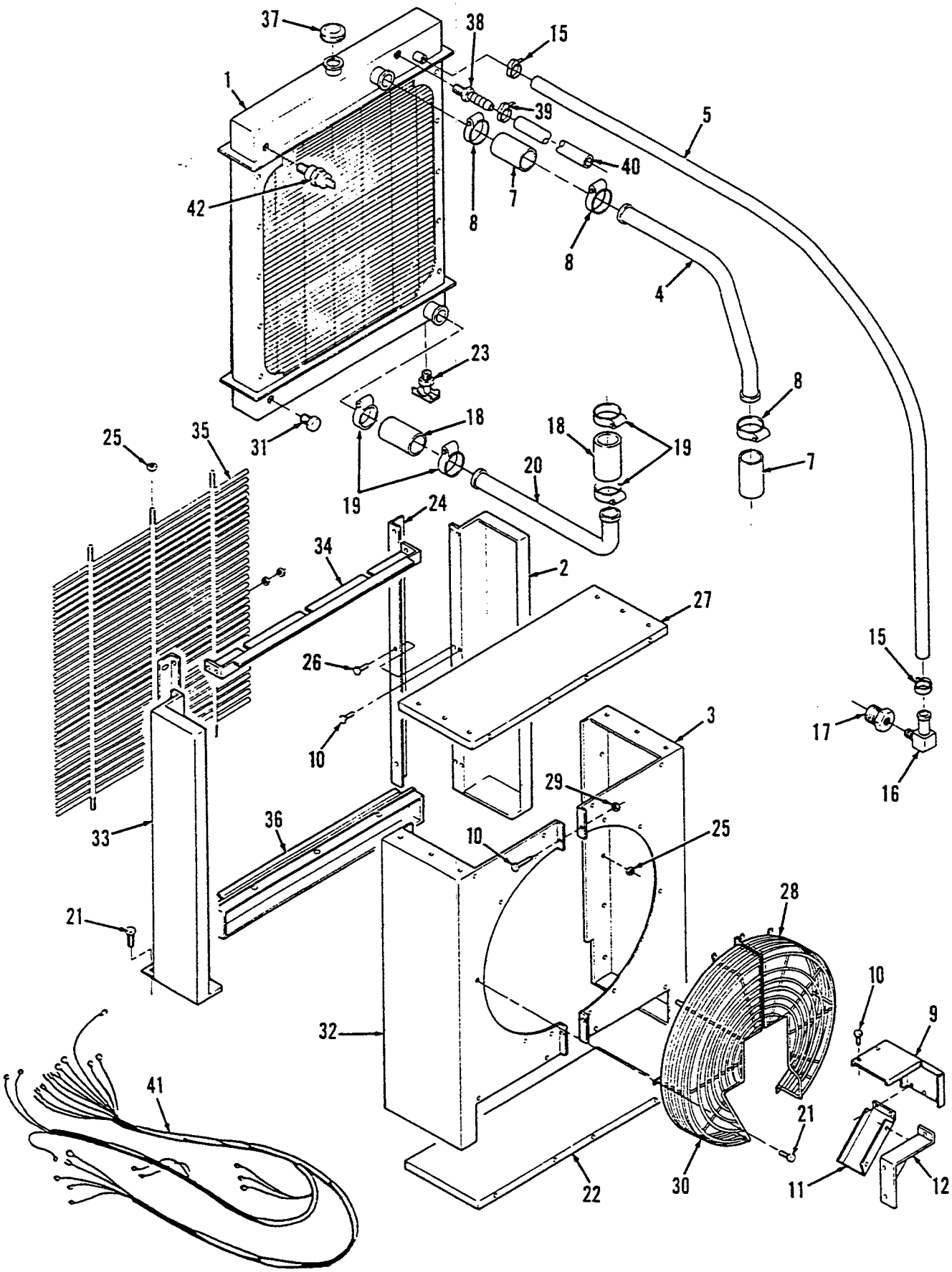

Cooling System
(Hi Temperature)

REF NO.	PART NO.	QTY USED	PART DESCRIPTION
1	130-2892	1	Radiator
2	130-2904-01	1	Guard, Radiator (Left Hand)
3	130-2905-01	1	Wrapper, Shroud - Fan (Left Hand)
4	130-2893	1	Tube, Inlet - Radiator
5	503-1467	1	Hose
6	332-1389	3	Cable, Tie
7	503-1380-01	2	Hose, Radiator
8	503-0998	4	Clamp, Hose
9	191-1755	1	Wrapper, Guard - Alternator
10	821-0018	19	Screw, Lock - Flange (1/4 - 20 x 5/8")
11	191-1757	1	Guard, Belt - Alternator
12	191-1756	1	Support, Guard - Alternator
13	718-1052	2	Screw, Cap - Hex Head (M10 x 1.5 x 16mm)
14	850-2010	2	Washer, Lock (M10)
15	503-0189	2	Clamp, Hose
16	502-0999	1	Elbow, Hose - 90°
17	505-1365	1	Bushing, Reducer
18	503-1460	2	Hose, Radiator
19	503-0868	4	Clamp, Hose
20	130-2894	1	Tube, Outlet - Radiator
21	821-0029	32	Screw, Lock (3/8 - 16 x 3/4")
22	130-2896	1	Shroud, Fan - Bottom
23	504-0003	1	Cock, Drain
24	130-2898	2	Bracket
25	870-0281	19	Nut, Lock (3/8 - 16)
26	821-0028	26	Screw, Lock (3/8 - 16 x 1/2")
27	130-2897	1	Shroud, Fan - Top
28	130-2825-01	1	Guar, Fan (Left Hand)
29	870-0212	8	Nut, Lock - Flange (1/4 - 20)
30	130-2825-02	1	Guard, Fan (Right Hand)
31	502-0153	3	Plug, Pipe - Hex
32	130-2905-02	1	Wrapper, Shroud - Fan (Right Hand)
33	130-2904-02	1	Guard, Radiator (Right Hand)
34	130-2902	1	Bracket, Mounting - Grille
35	130-2903	1	Grille
36	130-2901	1	Support, Grille
37	130-0449	1	Cap, Radiator
38	502-0996	1	Connector, Hose - Barbed
39	503-1133	2	Clamp, Hose
40	503-0304	1	Hose
41	338-2010	1	Harness, Wiring - Lo Coolant Level
42	193-0322	1	Sender, Level - Lo Coolant

Remote Radiator

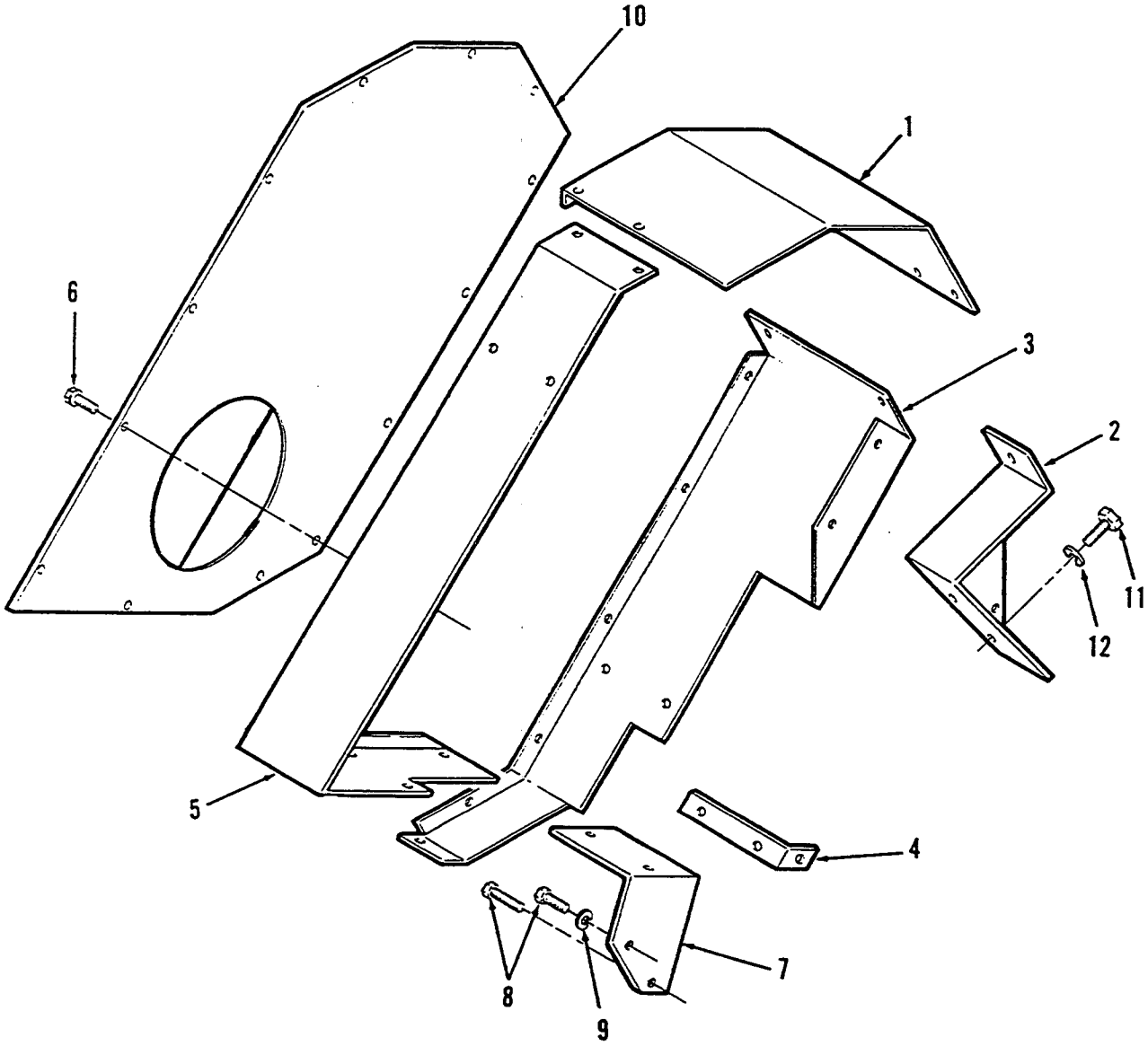

REF NO.	PART NO.	QTY USED	PART DESCRIPTION
1	130-2944	1	Wrapper, Guard - Belt (Top)
2	191-1756	1	Support, Guard - Alternator
3	130-2946	1	Wrapper, Guard - Belt (Left Hand)
4	130-2941	2	Bracket, Guard - Belt
5	130-2945	1	Wrapper, Guard - Belt (Right Hand)
6	821-0010	26	Screw, Locking Head (Flange) (1/4 - 20 x 1/2")
7	130-2942	1	Wrapper, Guard - Belt (Right Hand)
8	800-2110	2	Screw, Cap - Hex Head (M12 x 1.75 x 20mm)
9	850-2012	2	Washer, Lock (M12)
10	130-2943	1	Cover, Guard - Belt
11	800-2084	2	Screw, Cap - Hex Head (M10 x 1.5 x 16mm)
12	850-2010	2	Washer, Lock (M10)

Air Cleaner

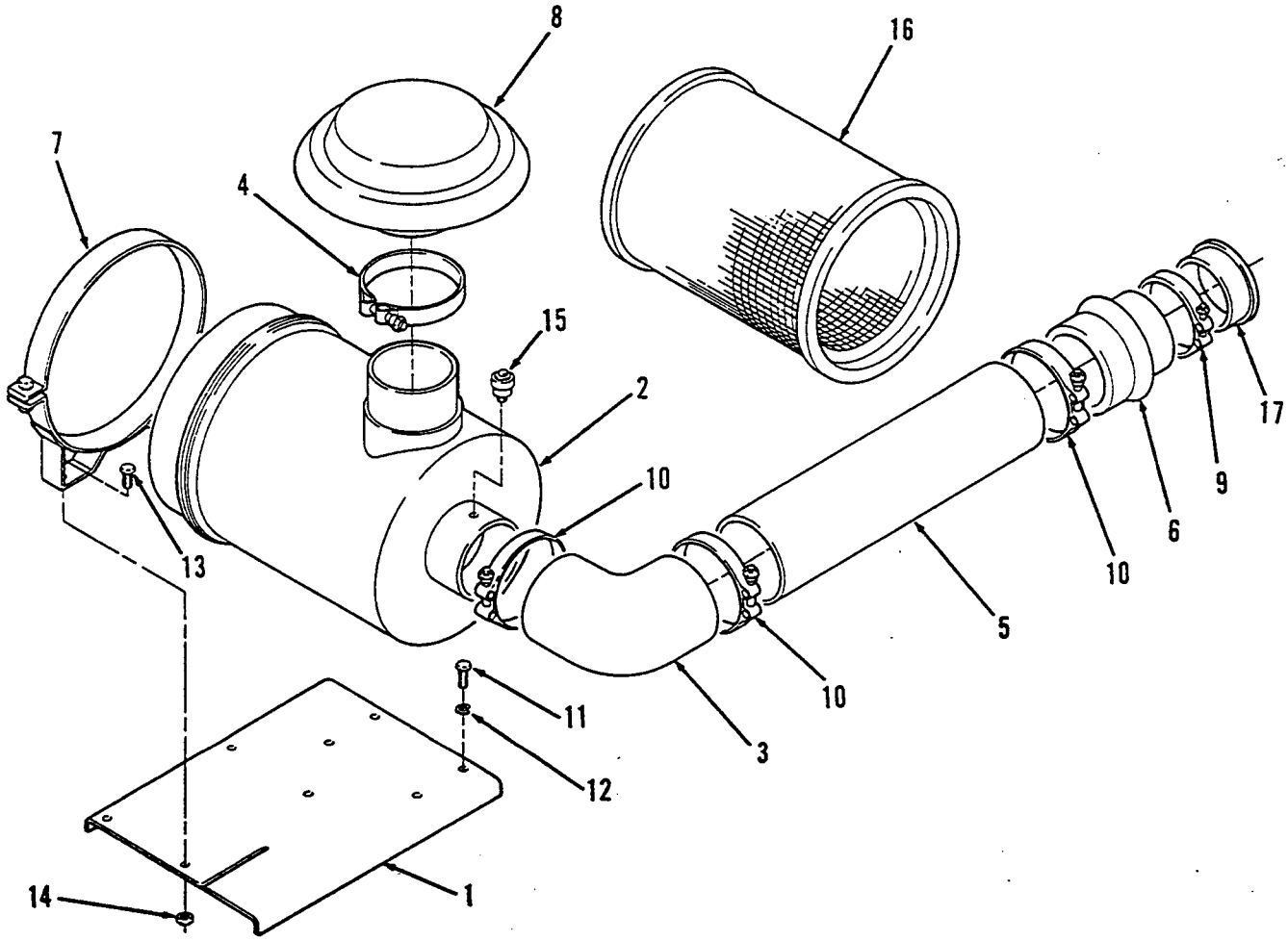

REF NO.	PART NO.	QTY USED	PART DESCRIPTION
1	140-2053	1	Bracket, Mounting - Air Cleaner
2	140-2049	1	Cleaner, Air
3	503-1461	1	Hose, Elbow - 90°
4	503-0864	1	Clamp, Hose - T-Bolt
5	140-2050	1	Tube, Inlet - Air
6	503-1462	1	Hose, Reducer
7	140-2052	2	Band, Mounting
8	140-1347	1	Hood, Inlet - Air
9	503-0960	1	Clamp, Hose
10	503-0864	3	Clamp, Hose
11	718-1072	4	Screw, Cap - Hex Head (M12 x 1.75 x 20mm)
12	850-2012	4	Washer, Lock (M12)
13	821-0029	4	Screw, Lock (3/8 - 16 x 3/4")
14	870-0281	4	Nut, Lock (3/8 - 16)
15	140-1548	1	Indicator, Service
16	140-2055	1	Element
17	503-1463	1	Insert, Reducer - Hose

Engine Coolant Heater

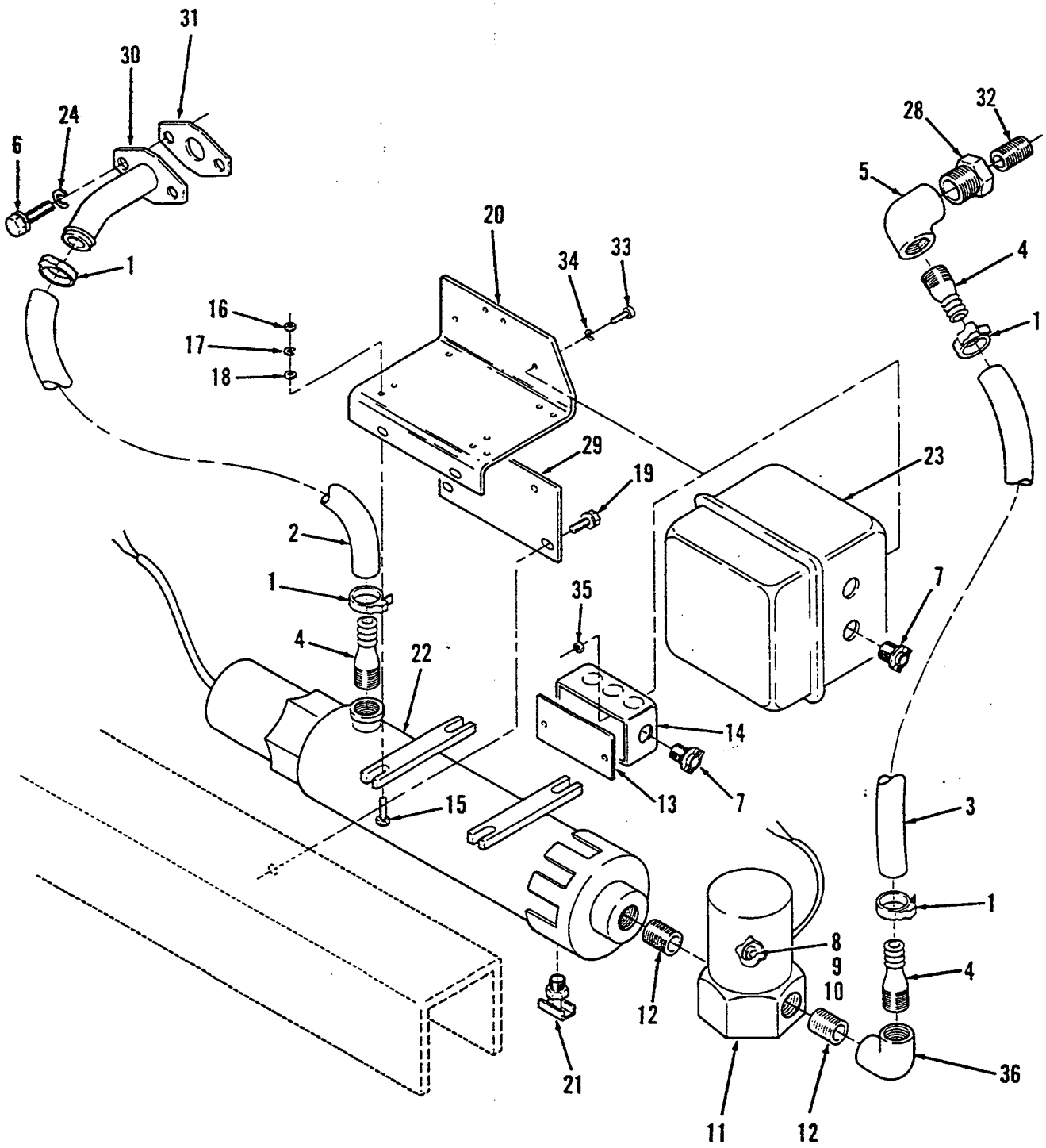

Engine Coolant Heater

REF NO.	PART NO.	QTY USED	PART DESCRIPTION
1	503-0189	4	Clamp, Hose
2	503-0848	1	Hose, Rubber
3	503-1201	1	Hose, Rubber
4	505-0759	3	Pipe, Adapter
5	505-0041	2	Pipe, Elbow
6	718-1054	2	Screw, Lock (M10 x 1.5 x 25mm)
7	331-0027	2	Clamp, Cable
8	332-0014	2	Terminal (#10) (Used on White Leads)
9	332-0149	1	Terminal (#8) (Used on White Leads)
10	323-0957	1	Nut, Wire (Used on Black Leads)
11	309-0304	1	Switch, Thermostatic
12	505-0004	1	Nipple, Pipe - Close
13	330-0004	1	Cover, Box - Outlet
14	330-0005	1	Box, Outlet - Electrical
15	800-0007	4	Screw, Cap - Hex Head (1/4 - 20 x 1")
16	862-0001	4	Nut, Hex (1/4 - 20)
17	850-0040	4	Washer, Lock - Spring (1/4)
18	526-0018	4	Washer, Flat (1/4)
19	821-0029	4	Screw, Lock (3/8 - 16 x 3/4")
20	130-2851	1	Bracket, Mounting
21	504-0003	1	Cock, Drain
22			Heater, Electrical - 4000 Watt
	333-0205	1	115 VAC
	333-0143	1	208 VAC
	333-0138	1	230 VAC
	333-0161	1	480 VAC
23	307-1164	1	Contactor, Electrical (480 VAC)
24	850-2010	2	Washer, Lock (M10)
25	332-0149	5	Terminal (Not Shown)
29	130-2850	1	Bracket, Mounting
30	130-2865	1	Tube, Heater - Water
31	130-2866	1	Gasket, Tube
32	505-0004	1	Nipple, Close
33	812-0100	4	Screw, Machine - Round Head (#10 - 24 x 1/2")
34	850-0030	4	Washer, Lock - Spring (#10)
35	860-0011	4	Nut, Hex (#10 - 24)
36	505-0041	1	Elbow, 90°

Electric Governor

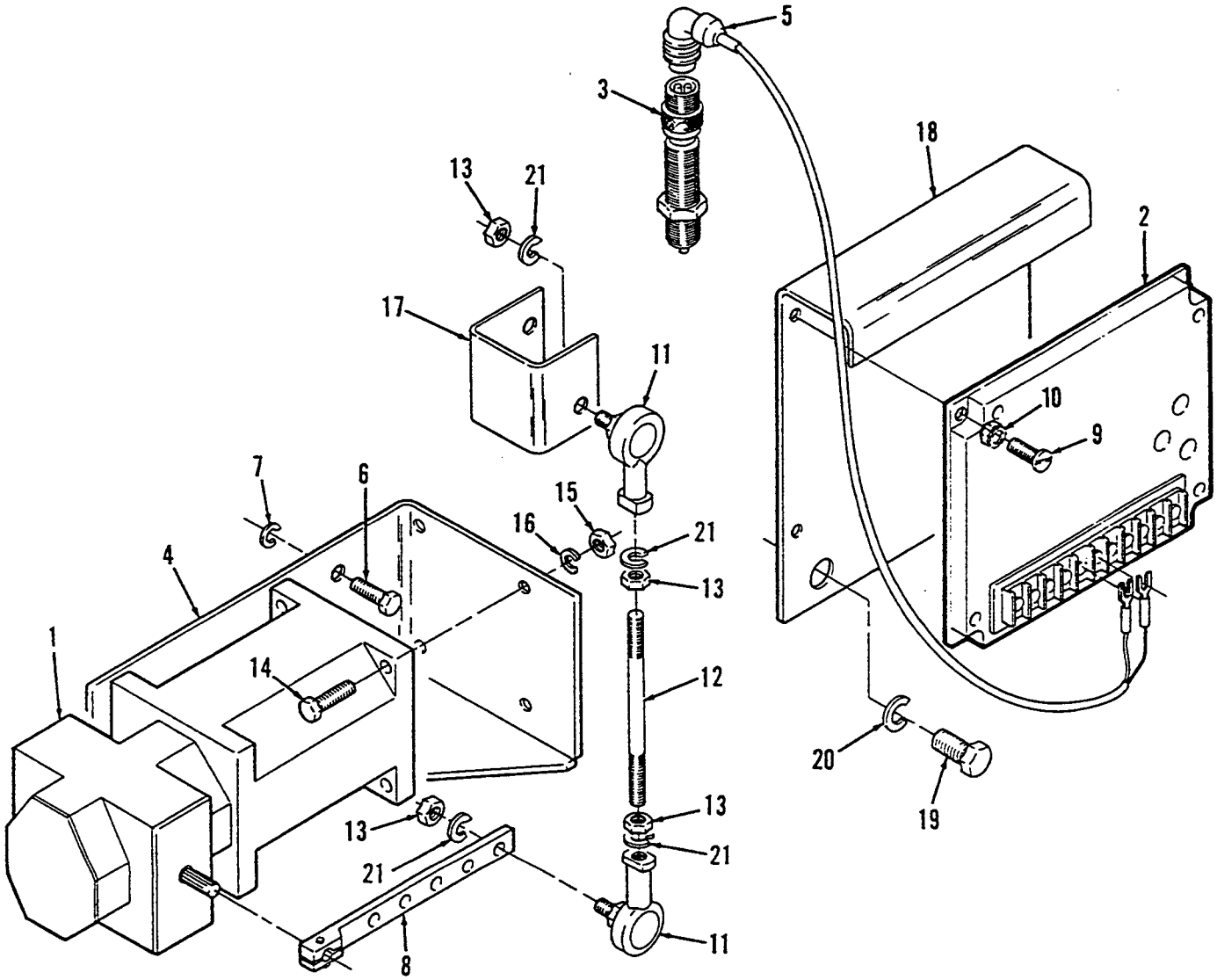

REF NO.	PART NO.	QTY USED	PART DESCRIPTION
1	151-0612	1	Acutator, Governor
2	151-0611	1	Control, Governor
3	151-0603-06	1	Sensor, Speed - Magnetic
4	150-2151	1	Bracket, Mounting - Governor
5	151-0613	1	Cable, Pickup - Magnetic
6	800-2085	4	Screw, Cap - Hex Head (M10 x 1.5 x 20mm)
7	850-2010	4	Washer, Lock (M10)
8	150-2145	1	Lever, Actuator - Governor
9	813-0103	4	Screw, Machine - Round Head (#10 - 32 x 3/4")
10	870-0131	4	Nut, Hex - ET (#10 - 32)
11	150-1995	2	Joint, Ball
12	520-0964	1	Stud
13	115-0025	4	Nut, Jam - Hex (1/4 - 28)
14	800-2037	4	Screw, Cap - Hex Head (M6 x 1 x 35mm)
15	860-2007	4	Nut, Hex (M6 x 1)
16	850-2006	6	Washer, Lock (M6)
17	150-2155	1	Arm, Governor - Electric
18	150-2007	1	Bracket, Controller
19	800-6170	2	Screw, Cap - Hex Head (M16 x 2 x 25mm)
20	850-2016	2	Washer, Lock(M16)
21	850-0040	2	Washer, Lock (1/4)

Chassis

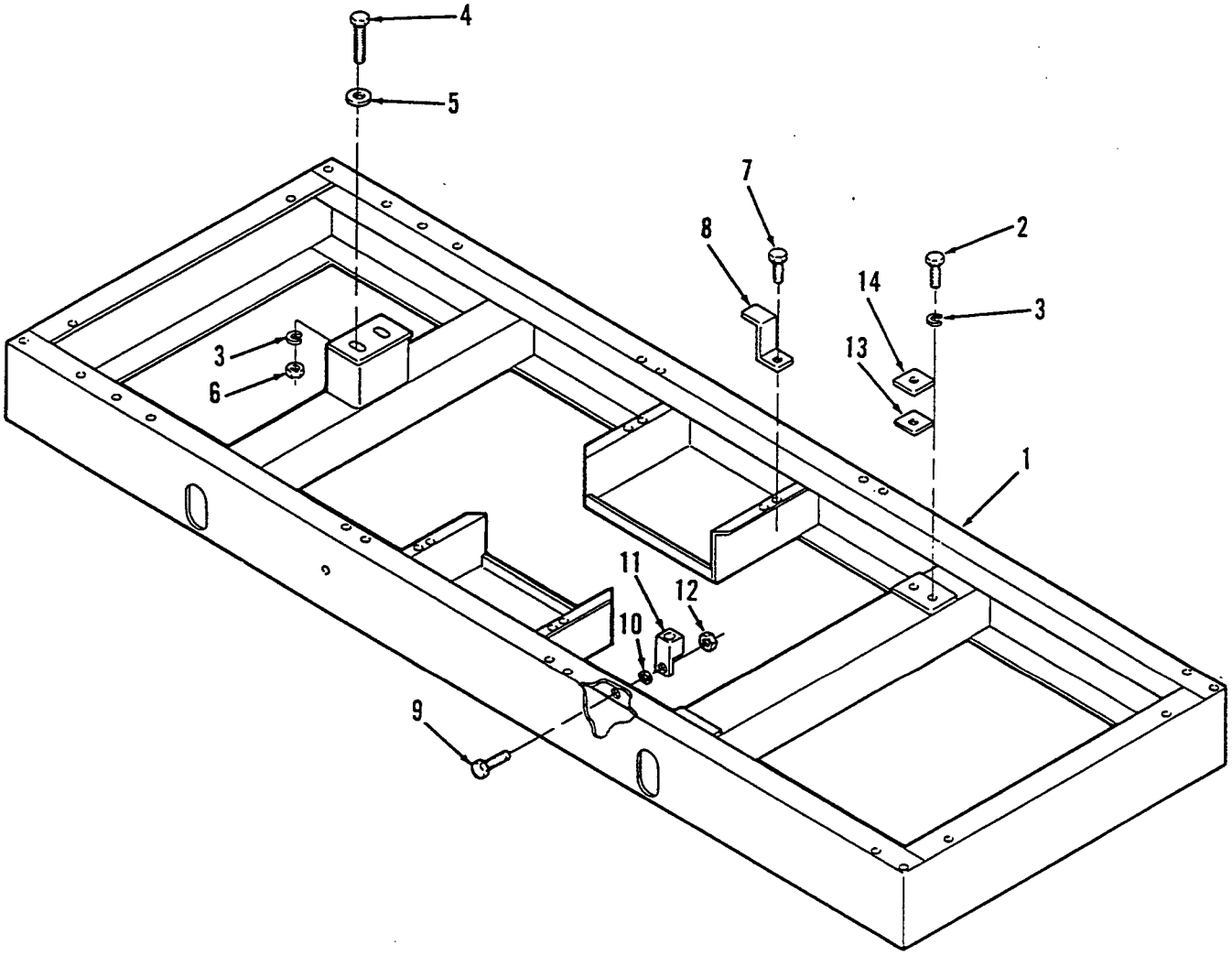

REF NO.	PART NO.	QTY USED	PART DESCRIPTION
1	403-2445	1	Skid
2	800-0153	4	Screw, Cap - Hex Head (3/4 - 10 x 1-1/2")
3	850-0079	6	Washer, Lock (3/4)
4	800-0156	2	Screw, Cap - Hex Head (3/4 - 10 x 2-1/4")
5	526-0238	2	Washer, Flat (3/4)
6	862-0008	2	Nut, Hex
7	800-0048	4	Screw, Cap - Hex Head (3/8 - 16 x 3/4")
8	416-0850	4	Bracket, Battery
9	821-0016	1	Screw, Lock (5/16 - 18 x 3/4")
10	856-0008	1	Washer, Lock - EIT (5/16)
11	332-1473	1	Lug, Solderless
12	870-0257	1	Nut, Lock (5/16 - 18)
13	232-1489	6	Shim, Mounting (16 Ga)
14	232-1490	6	Shim, Mounting (20 Ga)

Set Housing

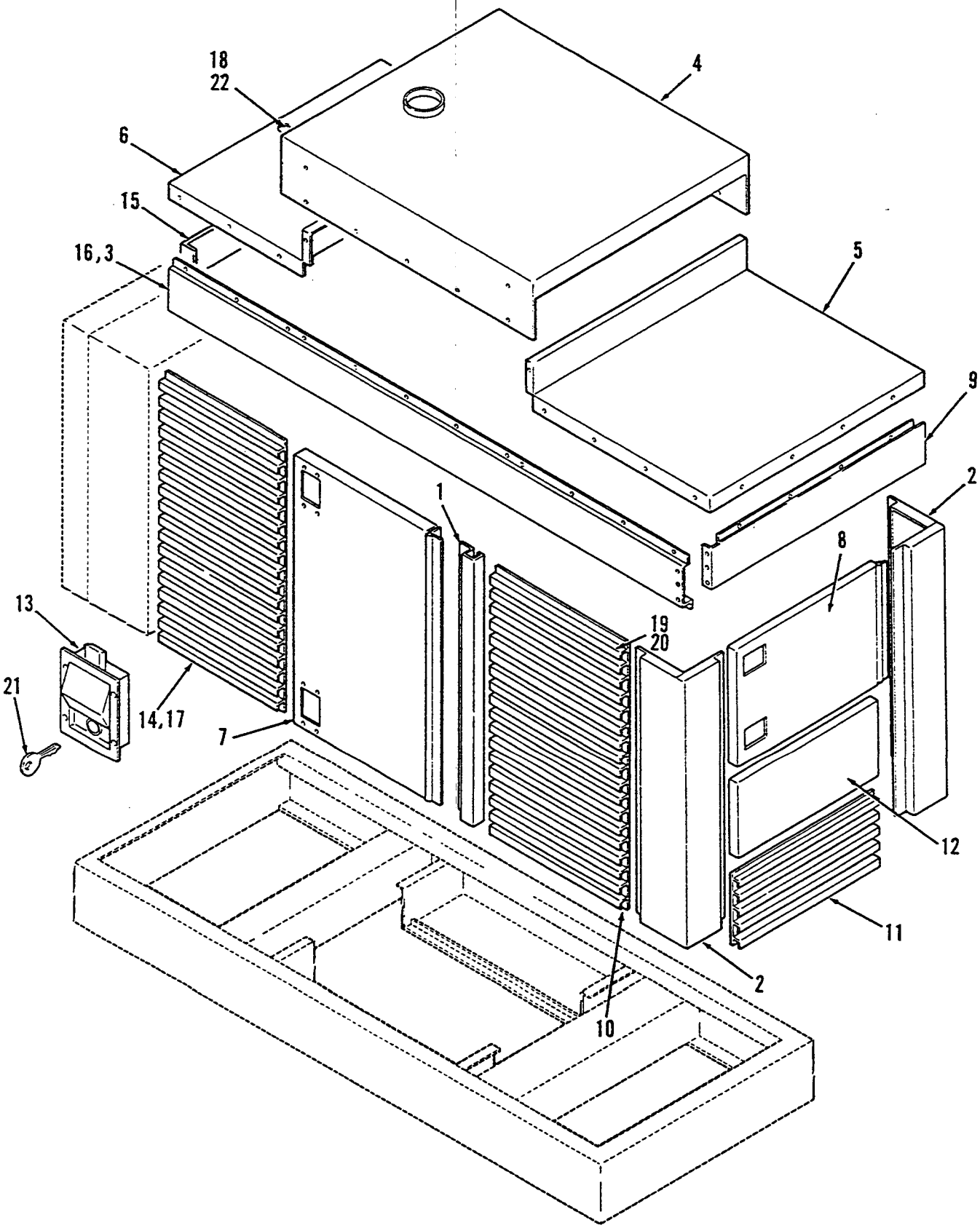

Set Housing

REF NO.	PART NO.	QTY USED	PART DESCRIPTION
1	405-3560	2	Post, Housing - Center
2	405-3441	2	Post, Housing - Rear
3	405-3555-01	1	Rail, Side - Roof (Right Hand)
4	405-3558	1	Roof, Housing - Center
5	405-3557	1	Roof, End - Generator
6	405-3556	1	Roof, End - Engine
7	405-3436	2	Door, Housing - Side
8	405-3434	1	Door; Control
9	405-3559	2	Cap, End - Housing Tip (Generator End)
10	405-3552	2	Grille, Housing - Side
11	405-3550	1	Grille, Housing - Rear
12	405-3424	1	Panel, Housing - Rear
13	406-0576	6	Handle, Housing
14	405-3677	1	Door Assembly, Grille (Right Hand)
15	405-3562	1	Cap, End - Housing Top (Engine End)
16	405-3555-02	1	Rail, Side - Roof (Left Hand)
17	405-3678	1	Door Assembly, Grille (Left Hand)
18	517-0233	1	Plug
19	405-3553	1	Door, Grille (Right Hand)
20	405-3554	1	Door, Grille (Left Hand)
21	406-0577	1	Key, Latch
22	98-5429	2	Decal, Fill - Cool
	821-0014	20	Screw, Lock (5/16 - 18 x 1/2")
	870-0257	50	Nut, Lock - Hex (5/16 - 18)
	812-0077	24	Screw, Machine - Round Head (#8 - 32 x 3/8")
	870-0235	24	Nut, Lock (#8 - 32)
	821-0029	28	Screw, Lock (3/8 - 16 x 3/4")
	870-0281	16	Nut, Lock - Hex (3/8 - 16)
	819-1102	29	Screw, Pan Head - Recessed (5/16 - 18 x 1/2")
	816-0098	50	Bolt, Carriage (5/16 - 18 x 5/8")
	526-0032	50	Washer, Flat (7/16)
	865-0007	4	Nut, Wing (5/16 - 18)
	128-0109	1	Insulation, Foam
	405-3739	2	Stop, Housing - Door
	406-0609	4	Catch, Magnetic

Generator
(Spec A)

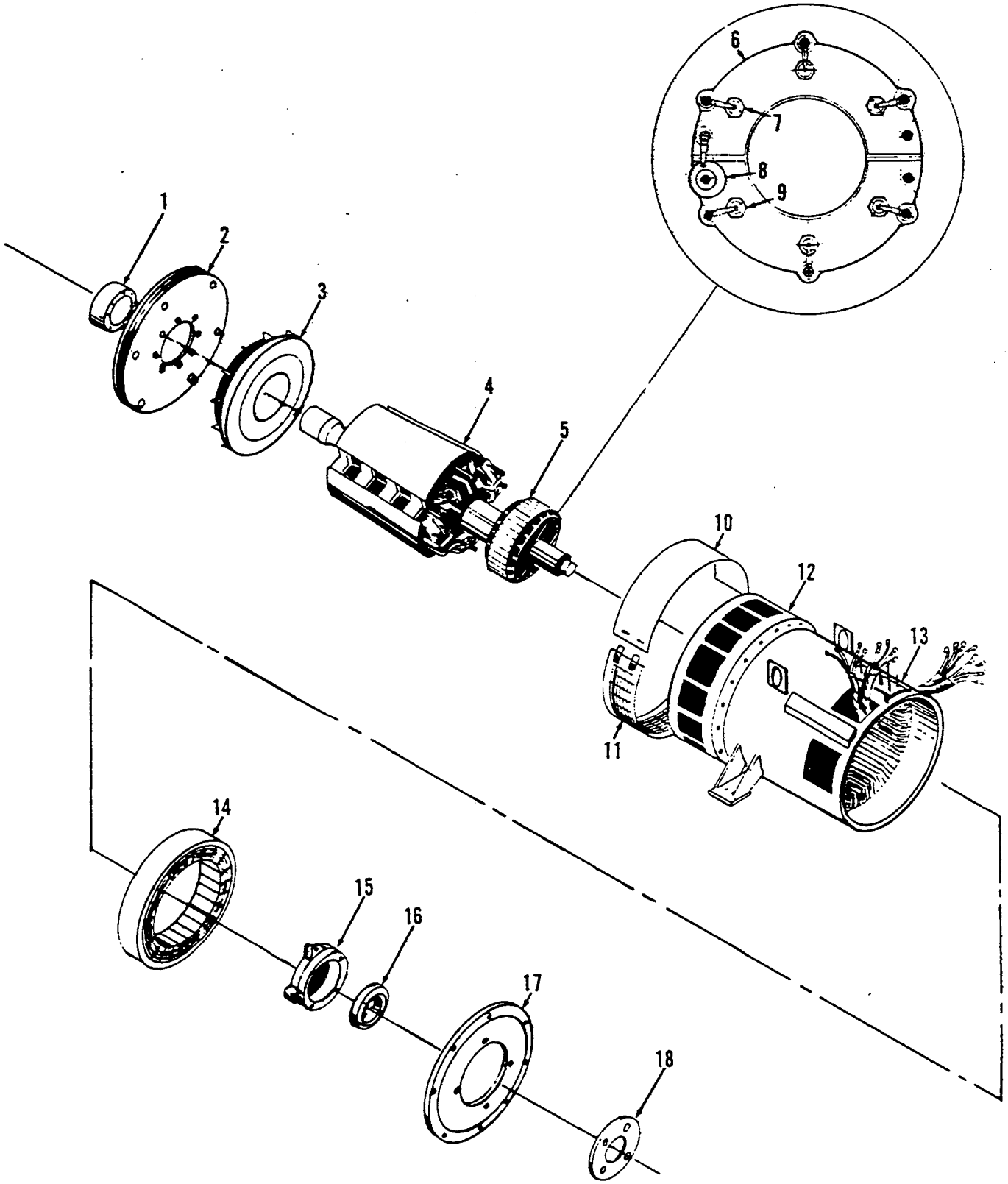

Generator
(Spec A)

REF NO.	PART NO.	QTY USED	PART DESCRIPTION
1	249-0230	1	Plate, Pressure
	249-0231	8	Bolt, Coupling (M20 x 50mm)
2	249-0229	4	Disc, Coupling
3	249-0209	1	Fan
4	249-0208	1	Rotor Assembly, Generator (Includes Excitor Rotor Assembly)
5	249-0236	1	Rotor Assembly, Exciter (Includes Parts Marked *)
	249-0226	1	* Key, Rotor - Exciter
6	249-0237	1	*Rectifier Assembly, Main
7	249-0239	3	*Diode, Forward
8	249-0240	1	*Varister
9	249-0238	3	*Diode, Reverse
10	249-0228	1	Cover, Upper
11	249-0227	1	Cover, Lower
12	249-0203	1	Bracket, End
	249-0204	8	Screw, Hex Head (M12 x 40mm)
	249-0205	8	Washer, Lock (M12)
13	249-0207	1	Stator Assembly, Generator
14	249-0210	1	Stator, Exciter
	249-0211	6	Screw, Hex Head (M6 x 50mm)
	249-0212	6	Washer, Lock (M6)
15	249-0244	1	Cratridge, Bearing
	249-0245	4	Screw, Hex Head (M10 x 50mm)
	249-0202	4	Washer, Lock (M10)
16	249-0241	1	Bearing
	249-0232	1	Circlip
17	249-0200	1	Bracket, End - Non-Drive
	249-0201	8	Screw, Hex Head (M10 x 35mm)
	249-0202	8	Washer, Lock (M10)
18	249-0242	1	Cap, Bearing
	249-0243	4	Screw, Hex Head (M10 x 50mm)
	249-0202	4	Washer, Lock (M10)
	249-0234	1	Cover, End (Not Illustrated)
	249-0235	4	Screw, Hex Head (M8 x 15mm)
	249-0218	4	Washer, Lock (M8)
	249-0246	1	Borad, Terminal - Main (Not Illustrated)
	249-0247	4	Link, Terminal
	249-0213	1	Terminal, Earthing
	249-0214	16	Nut, Hex (M12)
	249-0215	16	Washer, Plain (M12)
	249-0205	8	Washer, Lock (M12)
	249-0216	4	Screw, Hex Head (M8 x 40mm)
	249-0217	4	Nut, Hex (M8)
	249-0218	4	Washer, Lock (M8)
	249-0219	4	Washer, Plain (M8)
	249-0220	1	Board, Terminal - Auxiliary (Not Illustrated)
	249-0221	10	Nut, Hex (M4)
	249-0222	10	Washer, Lock (M4)
	249-0223	2	Link, Terminal
	249-0224	3	Screw, Hex Head (M4 x 16mm)
	249-0225	3	Washer, Plain (M4)
	249-0222	3	Washer, Lock (M4)
	249-0221	3	Nut, Hex (M4)

* Parts included in 249-0236 Exciter Rotor Assembly.

Generator
(Spec B)

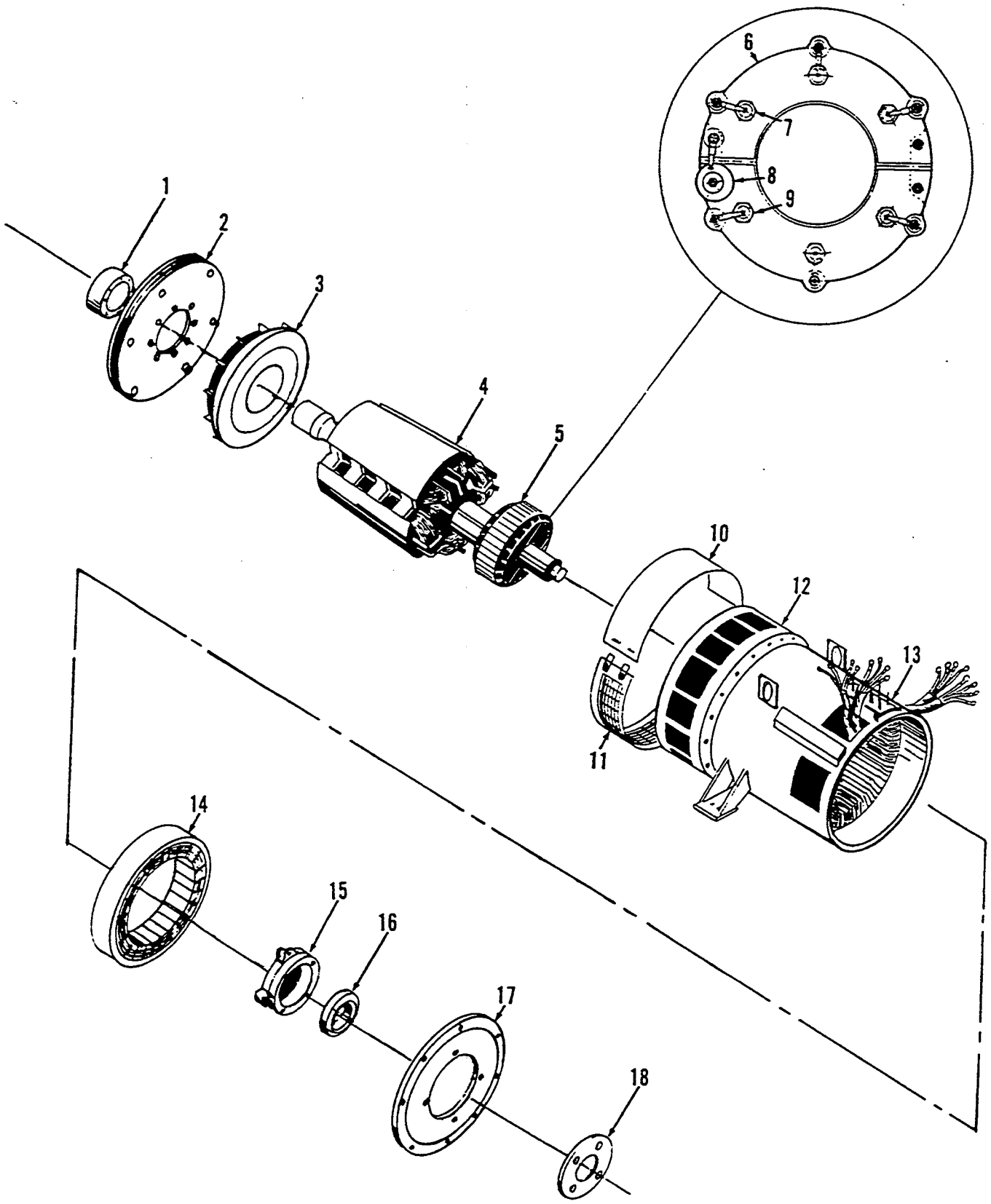

Generator
(Spec B)

REF NO.	PART NO.	QTY USED	PART DESCRIPTION
1	249-0230	1	Plate, Pressure
	249-0278	8	Bolt, Coupling
2	249-0276	4	Disc, Coupling
3	249-0254	1	Fan
	249-0271	1	Key, Fan
4	249-0253	1	Rotor Assembly, Generator (Includes Fan, And Exciter Rotor Assembly)
5	249-0257	1	Rotor Assembly, Exciter (Includes Main Rectifier Assembly)
	249-0271	1	Key, Rotor - Exciter
6	249-0237	1	Rectifier Assembly, Main (Includes Varister, And Diodes)
7	249-0239	3	Diode, Forward
8	249-0240	1	Varister
9	249-0238	3	Diode, Reverse
10	249-0275	1	Cover, Upper
11	249-0273	1	Cover, Lower
	249-0274	4	Screw, (M4 x 20mm)
12	249-0250	1	Bracket, End
	249-0204	8	Screw, Hex Head (M12 x 40mm)
	249-0205	8	Washer, Lock (M12)
13	249-0252	1	Stator Assembly, Generator
14	249-0255	1	Stator, Exciter
	249-0256	6	Screw, Hex Head (M6 x 65mm)
	249-0212	6	Washer, Lock (M6)
15	249-0244	1	Cartridge, Bearing
	249-0245	4	Screw, Hex Head (M10 x 50mm)
	249-0202	4	Washer, Lock (M10)
16	249-0241	1	Bearing
	249-0232	1	Circlip
17	249-0272	1	Bracket, End - Non-Drive
	249-0201	8	Screw, Hex Head (M10 x 35mm)
	249-0202	8	Washer, Lock (M10)
18	249-0242	1	Cap, Bearing
	249-0243	4	Screw, Hex Head (M10 x 30mm)
	249-0202	4	Washer, Lock (M10)
	249-0248	1	Cover (Not Illustrated)
	249-0249	2	Clip
	249-0258	1	Panel Assembly, Terminal (Not Illustrated)
	249-0259	4	Screw, Hex Head (M10 x 25mm)
	249-0260	4	Nut, Hex (M10)
	249-0202	4	Washer, Lock (M10)
	249-0261	12	Molding, Terminal (Not Illustrated)
	249-0216	3	Screw, Hex Head (M8 x 40mm)
	249-0262	8	Screw, Hex Head (M8 x 55mm)
	249-0217	16	Nut, Hex (M8)
	249-0218	16	Washer, Lock (M8)
	249-0263	8	Washer, Plain (M8)
	249-0264	4	Terminal, Linking (Not Illustrated)
	249-0265	4	Terminal, Main (Not Illustrated)
	249-0266	24	Screw, Hex Head (M8 x 35mm)
	249-0217	24	Nut, Hex (M8)
	249-0218	24	Washer, Lock (M8)
	249-0267	24	Washer, Plain (M8)
	249-0268	4	Screw, Hex Head (M12 x 35mm)
	249-0269	8	Screw, Hex Head (M12 x 30mm)
	249-0214	16	Nut, Hex (M12)
	249-0270	16	Washer, Plain (M12)
	249-0204	4	Screw, Hex Head (M12 x 40mm)
	249-0205	16	Washer, Lock (M12)
	249-0277	1	Spacer, Coupling (Not Illustrated)

Generator Heater

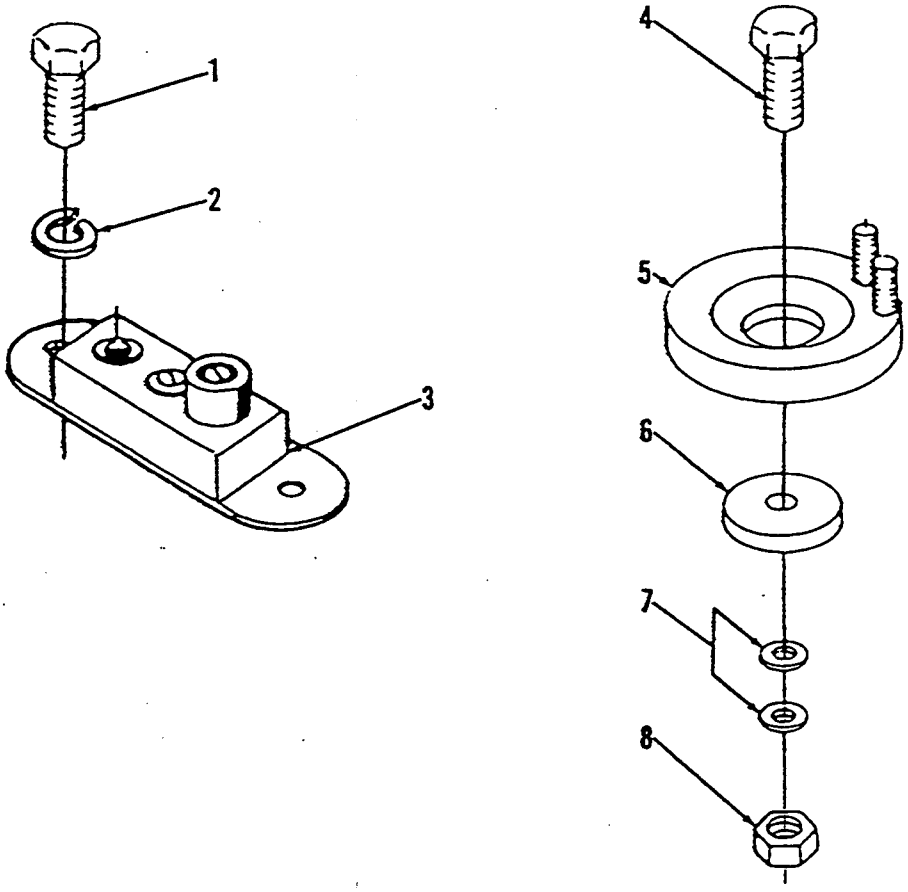

REF NO.	PART NO.	QTY USED	PART DESCRIPTION
1	812-0068	2	Screw, Machine - Round Head (#6 - 32 x 1")
2	853-0003	2	Washer, Lock - ET
3	309-0128	1	Thermostat
4	800-0004	2	Screw, Cap - Hex Head (1/4 - 20 x 5/8")
5	333-0059	2	Heater - 120 Volt 100 Watt
6	526-0123	2	Washer, Flat
7	526-0018	4	Washer, Flat
8	862-0001	2	Nut, Hex (1/4 - 20)

Magnetic Pickup

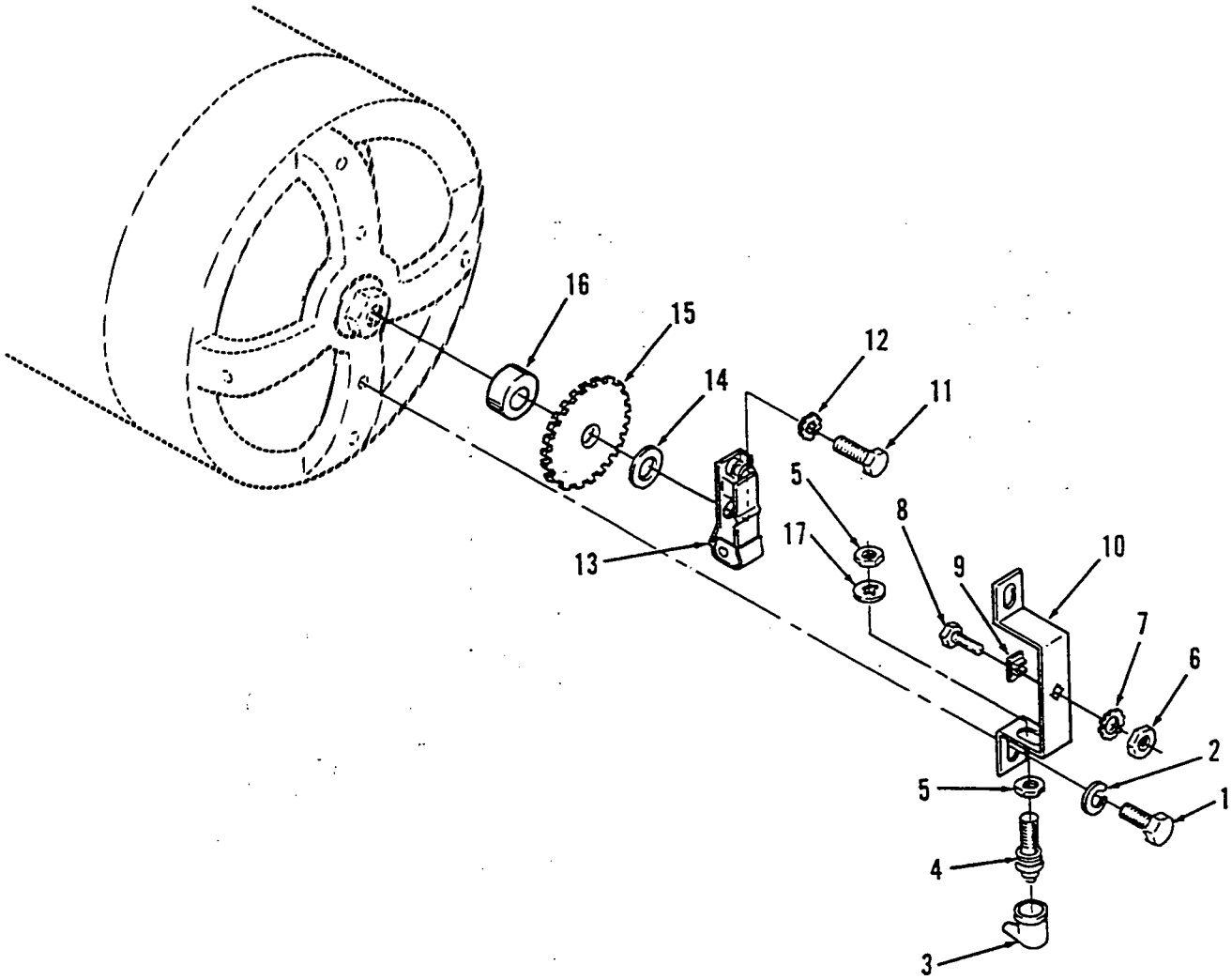

REF NO.	PART NO.	QTY USED	PART DESCRIPTION
1	800-0003	2	Screw, Cap - Hex Head (1/4 - 20 x 1/3")
2	850-0040	2	Washer, Lock - Spring (1/4")
3	150-1410	1	Cap, Insulator
4	150-1406	1	Sensor, Speed - Magnetic
5	868-0011	2	Nut, Hex - Jam (3/4 - 16)
6	862-0001	2	Nut, Hex (1/4 - 20)
7	853-0013	1	Washer, Lock - ET (1/4)
8	150-0723	1	Contact, Electrical
9	870-0250	1	Nut, Insulator
10	301-9697	1	Bracket, Mounting
11	800-0053	1	Screw, Cap - Hex Head (3/8 - 16 x 1-3/4")
12	856-0010	1	Washer, Lock - EIT (3/8)
13	150-0717	1	Switch, Overspeed
14	526-0077	1	Washer, Flat (13/32" ID x 1-1/4" OD x 1/4" THK)
15	150-1557	1	Wheel, Sensor - Speed
16	370-4011	1	Spacer, Sleeve
17	854-0031	1	Washer, Lock - IT (3/4)

Overspeed Switch

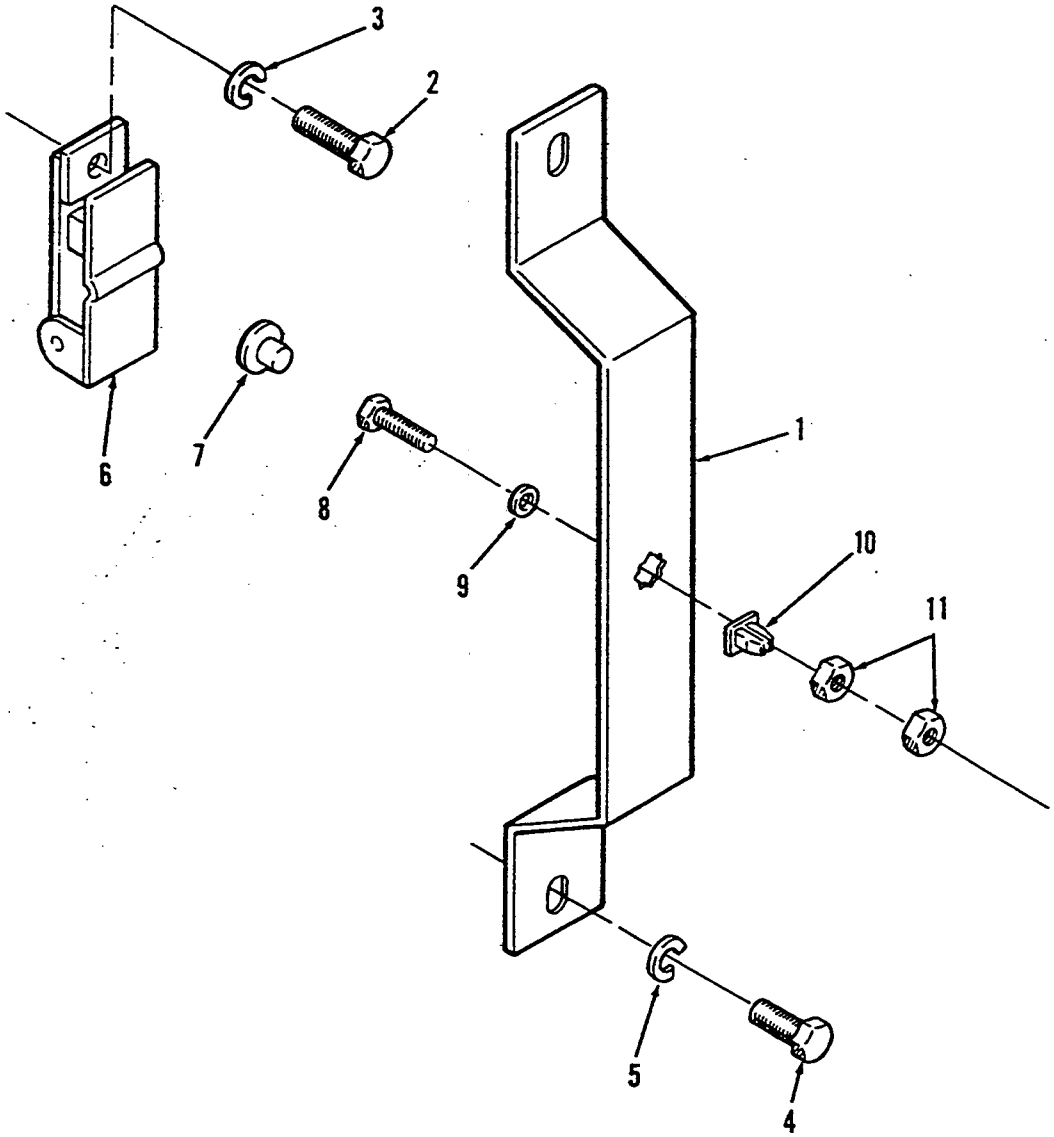

REF NO.	PART NO.	QTY USED	PART DESCRIPTION
1	150-2138	1	Bracket, Switch - Overspeed
2	718-1056	1	Screw, Cap - Hex Head (M10 x 1.5 x 35mm)
3	850-2010	1	Washer, Lock (M10)
4	718-1035	2	Screw, Cap - Hex Head (M8 x 1.25 x 16mm)
5	850-2008	2	Washer, Lock (M8)
6	150-0956	1	Switch Assembly, Overspeed
7	306-0036	1	Contact
8	150-0724	1	Screw, Cap - Hex Head (1/4 - 20 x 7/8")
9	853-0013	1	Washer, Lock - ET (1/4)
10	870-0250	1	Nut, Insulating (1/4)
11	862-0001	2	Nut, Hex (1/4 - 20)

Engine Control

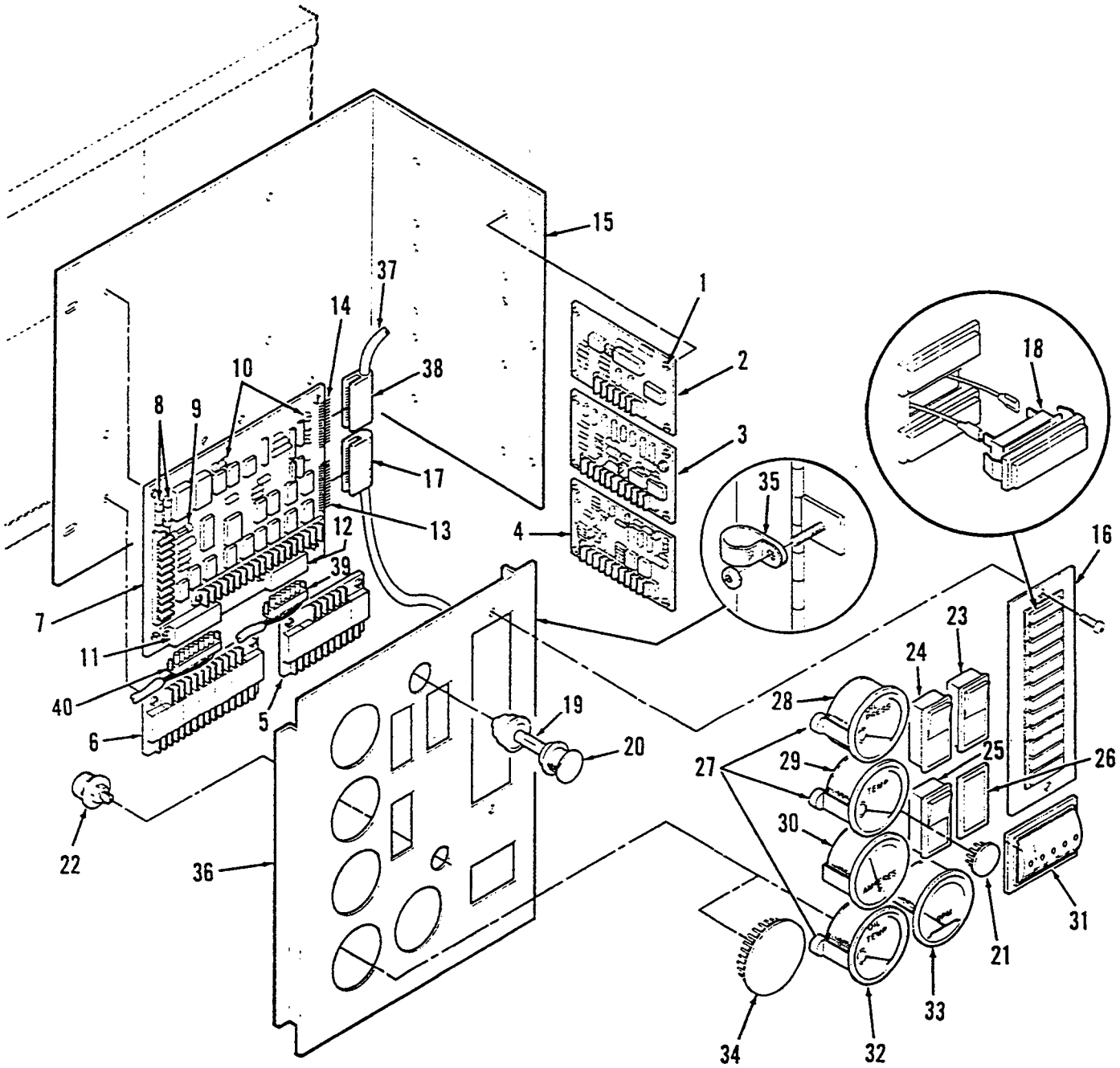

Engine Control

REF NO.	PART NO.	QTY USED	PART DESCRIPTION
1	815-0544	24	Screw, Machine - Round Head IT Washer (#6 - 32 x 1/2")
2	300-2899	1	Board Assy, Printed Circuit - Time Delay, Start/Stop (A15)
3			Board Assy, Printed Circuit - Magnetic Pickup (A16)
	300-2903	1	Standard (Fixed Sensitivity)
	300-2904	1	Precision (Adj Sensitivity)
4	300-2906	1	Board Assy, Printed Circuit - Over/Under Volt Sensor (A17)
5	300-2856	1	Board Assy, Printed Circuit - Relay Assembly - (A13)
6	300-2863	1	Board Assy, Printed Circuit - Relay Assembly - (A14)
7			Board Assy, Printed Circuit - Engine Monitor - (A11) (Includes Fuses & Connectors)
	300-2808	1	2 Light Control
	300-2810	1	7 Light Control
	300-2812	1	12 Light Control
8	321-0270	2	Fuse, Cartridge - 20 Amp (F1, F2)
9	321-0231	1	Fuse, Cartridge - 15 Amp (F3)
10	321-0094	2	Fuse, Cartridge - 5 Amp (F4, F5)
11	323-1305	1	Connector - 8 Pin (P1)
12	323-1303	1	Connector - 6 Pin (P2)
13	323-1309	1	Connector - 13 Pin (P3)
14	323-1307	1	Connector - 12 Pin (P4)
15	301-8851	1	Bracket, Mounting - Printed Circuit Board Assembly
	821-0004	4	Screw, Self-Locking - Hex Washer Head (#10 - 32 x 5/16")
16			Module, Indicator - Fault (A12) (Includes Connector Housing)
	322-0358-02	1	2 Light Control
	322-0359-02	1	7 Light Control
	322-0360-02	1	12 Light Control
	815-0385	2	Screw, Machine - Round Head (#6 - 32 x 1/2")
	870-0183	2	Nut, Self-Locking - ET Hex Washer Head (#6 - 32)
17	323-1310	1	Housing, Conn - 13 pin (J3)
	323-1302	13	Contact, Pin
18	322-0369-02	1	Lamp, Incandescent - 1/3 Watt 28 Volts DC
19	322-0017	1	Lamp, Incandascent - 28 Volts DC (DS11)
20	322-0361	1	Holder, Lamp
21	517-0131	1	Plug, Button
22	151-0402	1	Potentiometer - Speed Control (R11)
23	308-0785	1	Switch, Push - Reset/Panel Lamp (S11)
24	308-0784	1	Switch, Push - Run/Stop/ Remote (S12)
26	301-6257	1	Cover, Hole - Switch
27	193-0250	3	Resistor, Gauge (R12)
28	193-0352	1	Gauge, Pressure - Oil (M11)
29	193-0351	1	Gauge, Temp - Water (M12)
30	302-1790	1	Meter, Ampere - DC (M13)
31	302-0885	1	Meter, Running Time (M14)
32	193-0330	1	Gauge, Temp - Oil (M15)
33	302-1715	1	Meter, Tach (M16)
34	517-0221	1	Plug, Button
35	322-0052	1	Clamp, Loop
	870-0131	1	Nut, Self-Locking - ET Hex Washer Head (#10 - 32)
36			Door, Control
	301-9055-01	1	5 Gauge Holes
	301-9055-02	1	3 Gauge Holes
37	338-1817	1	Harness, Wiring - DC (Includes Connector Housing)
38	323-1308	1	Housing, Conn - 12 Pin (J4)
	323-1302	12	Contact, Pin
39	323-1304	1	*Housing, Conn - 6 Pin (J2)
	323-1200	6	* Contact, Pin
40	323-1306	1	*Housing, Conn - 8 Pin (J1)
	323-1200	8	* Contact, Pin

* Parts included in Control To Engine Wiring Harness.

Generator Control

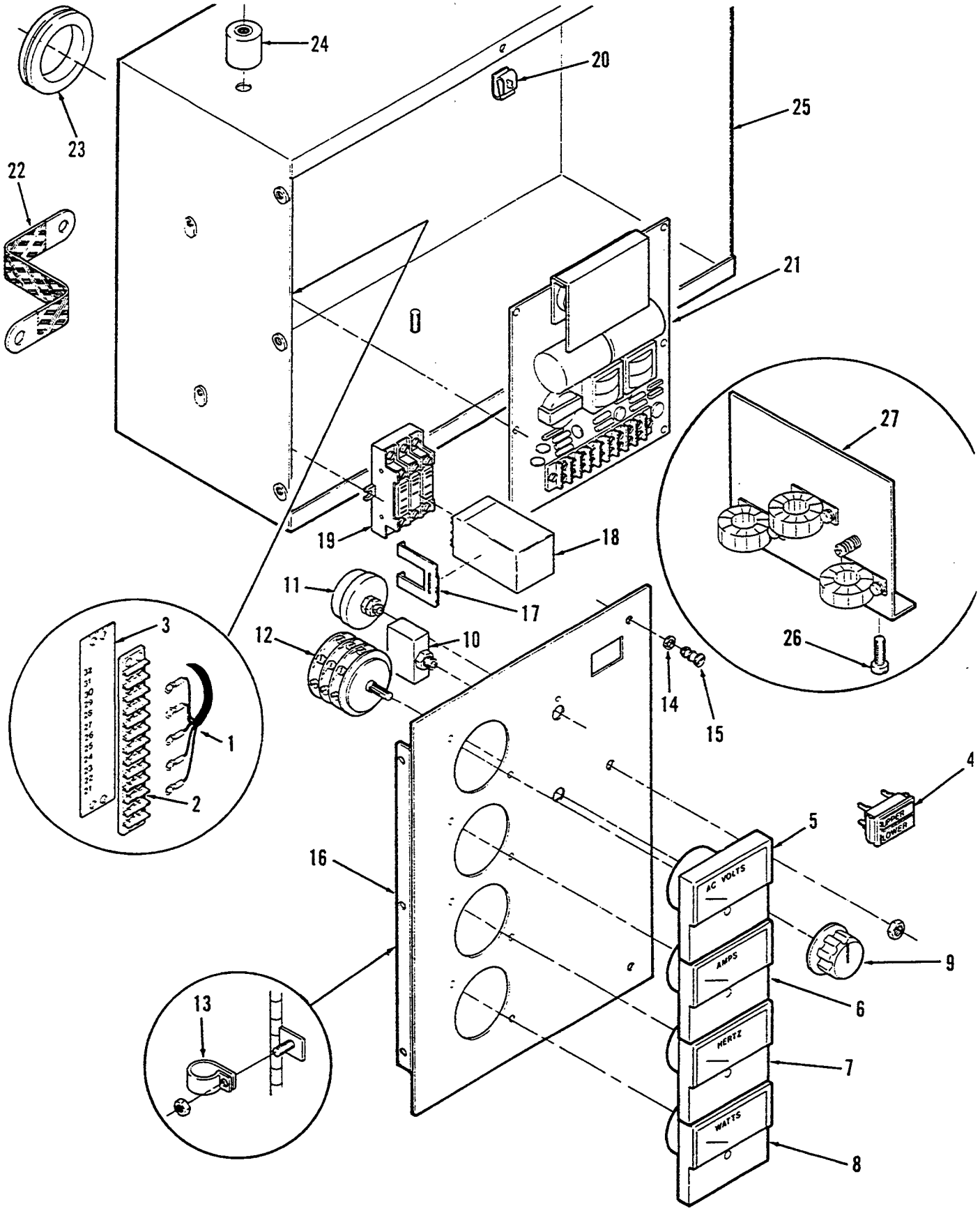

Generator Control

REF NO.	PART NO.	QTY USED	PART DESCRIPTION
1			Harness, Wiring - AC (Includes Terminal Block)
	338-1818	1	Controls With Meters
	338-1853	1	Controls Without Meters
	812-0065	2	Screw, Machine - Round Head (#6 - 32 x 5/8")
2	332-0607	1	Block, Terminal (TB1)
3	332-2723	1	Strip, Marker
4	322-0363	1	Light, Indicator - Dual (DS21, DS22)
5	302-1148	1	Meter, Volt - AC (M21)
6	302-1728		Meter, Ampere - Dual Scale Ratio 0-600/1200 (M22)
7	302-1720	1	Meter, Frequency (M23)
8		1	Meter, Watt (M24) (See Separate Page For Components)
9	303-0032	1	Knob
10		1	Breaker, Circuit (CB21)
	320-1121	1	Without Auxiliary Contacts
	320-1438	1	With Auxiliary Contacts
11	303-0261	1	Rheostat (R21)
12	308-0284	1	Switch, Rotary (S21)
13	332-0052	1	Clamp, Loop
	870-0131	1	Nut, Self-Locking - ET Hex Washer Head (#10 - 32)
14	406-0334	2	Clip, Retaining - Turnbutton Fastener
15	406-0333	2	Stud, Fastener - Turnbutton
16			Door, Control
	301-9054-01	1	4 Meter Holes
	301-9054-02	1	3 Meter Holes
	301-9054-03	1	No Meter Holes
	821-0004	3	Screw, Self-Locking - Hex Washer Hd (#10 - 32 x 5/16")
17	307-1987	2	Clip, Retaining - Relay
18	307-1056	1	Relay, 24 VDC
19	323-0804	1	Socket, Relay
	815-0544	2	Screw, Machine - IT Round Washer Hd (#6 - 32 x 1/2")
20	406-0332	2	Receptacle, Turnbutton Fastener
21	300-2977	1	Regulator, Voltage (VR21)
	815-0544	6	Screw, Machine - IT Round Washer Hd (#6 - 32 x 1/2")
22	337-0049	1	Strap, Electrical (Ground)
	800-0024	1	Screw, Cap - Hex Head (5/16 - 18 x 1/2")
	856-0008	1	Washer, Lock - EIT (5/16)
23	508-0051	1	Grommet
24	402-0527	4	Mount, Vibration
	800-0045	4	Screw, Cap - Hex Head (5/16 - 18 x 3/8")
	850-0045	4	Washer, Lock - Spring (5/16
25	301-8065	1	Box, Control
26	821-0010	2	Screw, Self-Locking - Hex Washer Hd (1/4 - 20 x 1/2")
27		1	Transformer Assembly - Current (See Separate Page For Components)

Current Transformer

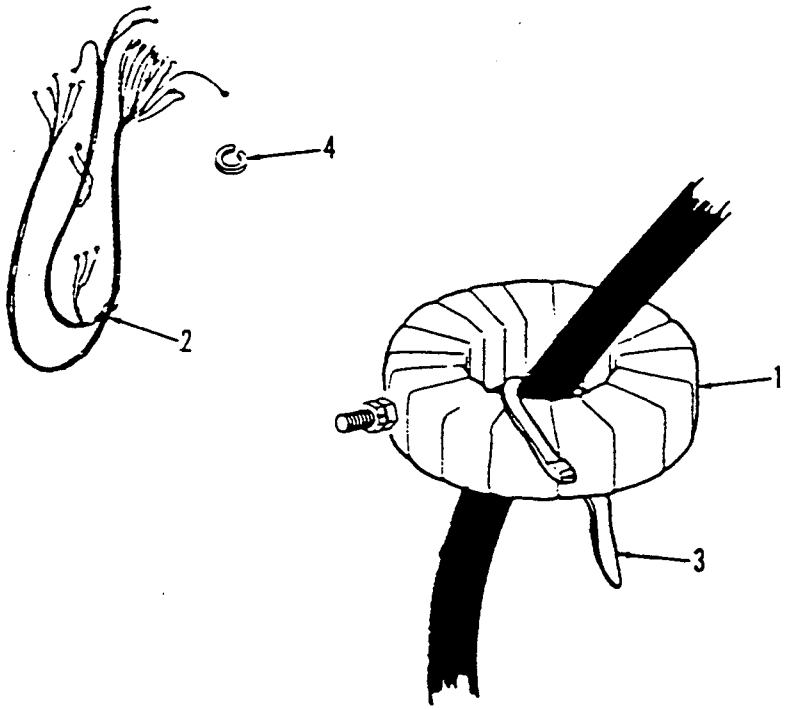

REF NO.	PART NO.	QTY USED	PART DESCRIPTION	REF NO.	PART NO.	QTY USED	PART DESCRIPTION
1	302-1794-10	1	Transformer, Current - Ratio 600/5	3	332-1389	5	Tie, Cable
2	338-1980	1	Harness, Wiring - Transformer	4	856-0008	2	Washer, Lock - EIT (5/16)

Cross Current Transformer

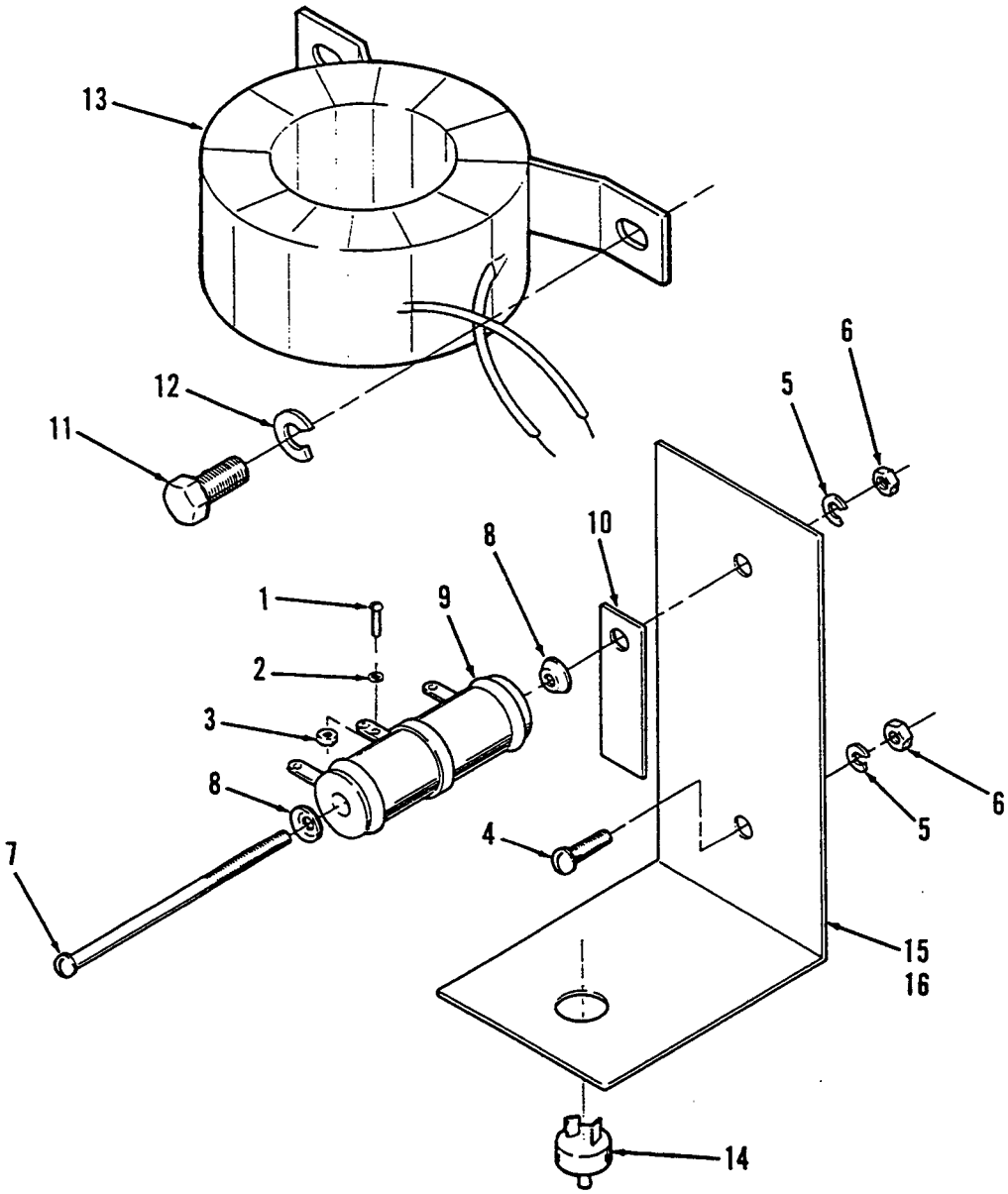

REF NO.	PART NO.	QTY USED	PART DESCRIPTION
1	812-0061	3	Screw, Machine - Round Head (#6 - 32 x 3/8")
2	853-0003	6	Washer, Lock - ET (#6)
3	860-0006	6	Nut, Machine - Hex (#6 - 32)
4	813-0100	1	Screw, Machine - Round Head (#10 - 32 x 1/2")
5	850-0030	2	Washer, Lock (#10)
6	870-0053	2	Nut, Hex (#10 - 32)
7	813-0113	1	Screw, Machine - Round Head (#10 - 32 x 2-3/4")
8	304-0014	2	Washer, Centering (7/32)
9	304-0005	1	Resistor, Current - Cross
10	304-0292	1	Insulator, Resistor
11	800-0003	2	Screw, Cap - Hex Head (1/4 - 20 x 1/2)
12	850-0040	2	Washer, Lock (1/4)
13	302-0826	1	Transformer
14	308-0069	1	Switch, Toggle
15	301-9657	1	Bracket, Current - Cross
16	98-2313	1	Decal

Wattmeter

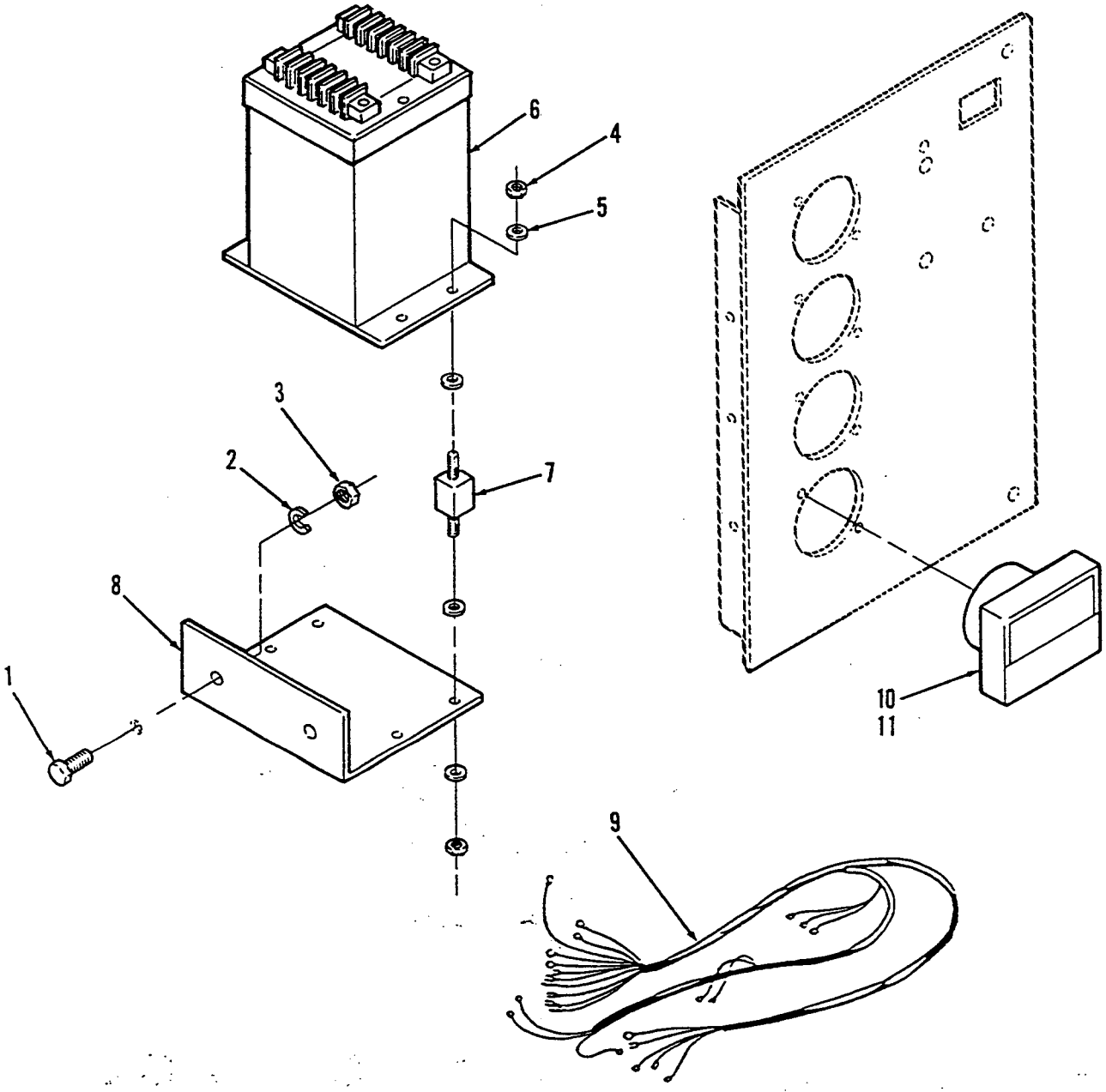

REF NO.	PART NO.	QTY USED	PART DESCRIPTION
1	821-0017	2	Screw, Lock (5/16 - 18 x 1/2")
2	850-0045	2	Washer, Lock (5/16)
3	862-0014	2	Nut, Hex (5/16 - 18)
4	860-0008	8	Nut, Hex (#8 - 32)
5	856-0002	16	Washer, Lock - EIT (#8)
6			Transducer, Watts
	302-1082	1	3 Phase, 60 Hertz
	302-1083	1	3 Phase, 50 Hertz
7	402-0354	4	Mount, Shock
8	301-6987	1	Bracket, Mounting - Watts Transducer
9	338-1936	1	Harness, Wiring - Watts Transducer
10	302-1722	1	Meter, Watt - DC
11	302-1721-11	1	Dial, Wattmeter

Control Housing

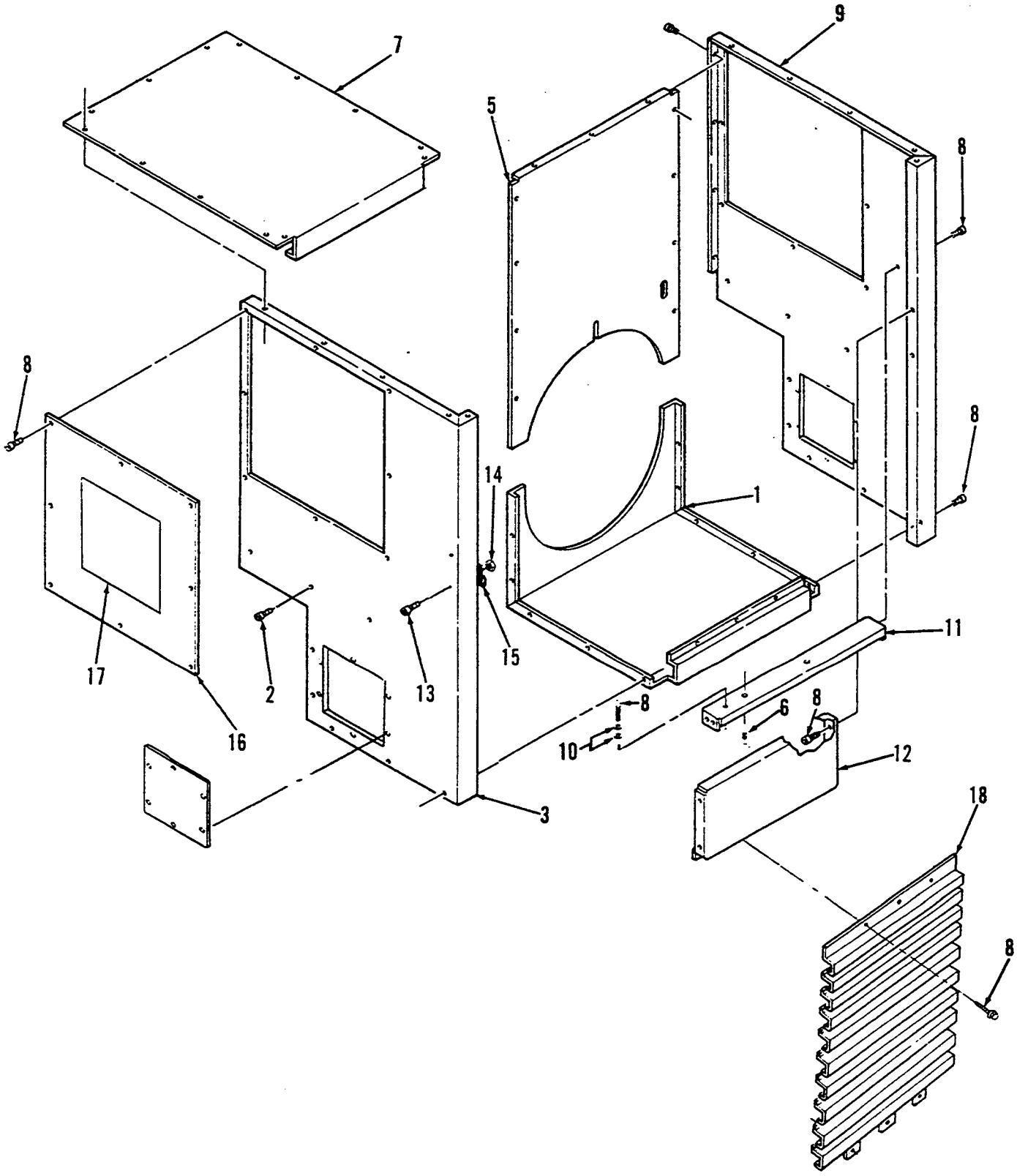

Control Housing

REF NO.	PART NO.	QTY USED	PART DESCRIPTION
1	301-9509	1	Panel, Housing - Control (Bottom)
2	821-0029	6	Screw, Lock (3/8 - 16 x 3/4")
3	301-9504-01	1	Panel, Housing - Control (Side) (Right Hand)
4	508-0051	1	Grommet
5	301-9506	1	Panel, Housing - Control (Rear)
6	821-0014	4	Screw, Lock (5/16 - 18 x 1/2")
7	301-9512	1	Cover, Housing - Control (Top)
8	821-0010	56	Screw, Lock (1/4 - 20 x 1/2")
9	301-9504-02	1	Panel, Housing - Control (Side) (Left Hand)
10	856-0006	2	Washer, Lock - EIT (1/4)
11	301-9510	2	Support, Box - Control
12	301-9505	1	Panel, Housing - Control (Front)
13	821-0018	1	Screw, Lock (1/4 - 20 x 5/8")
14	870-0212	1	Nut, Lock (1/4 - 20)
15	332-1356	1	Clamp, Loop
16	301-9511	2	Cover Assembly, Housing - Control
17	98-5513	2	Decal, Connection - Generator
18	234-0490	1	Grille, Inlet - Air (Generator)
19	301-9629	2	Cover, Housing - Control (Side)

Control Heater

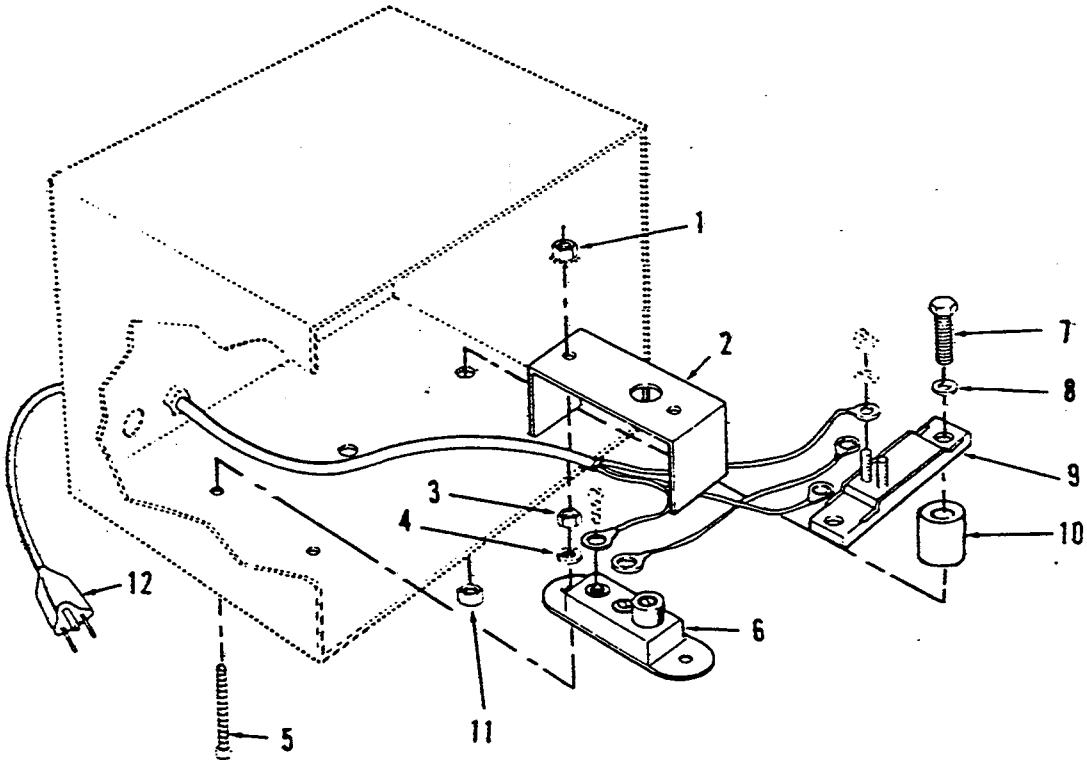

REF NO.	PART NO.	QTY USED	PART DESCRIPTION	REF NO.	PART NO.	QTY USED	PART DESCRIPTION
1	870-0183	2	Nut, Self-Locking - Hex ET (#6 - 32)	7	800-0034	2	Screw, Cap - Hex Head (5/16 - 18 x 2-1/4")
2	301-1886	1	Cover, Thermostat	8	526-0113	2	Washer, Flat (11/32" ID x 1" OD x 3/32" THK)
3	860-0006	2	Nut, Hex (#6 - 32)	9	333-0151	1	Heater, Electrical
4	854-0006	2	Washer, Lock - IT (#6)	10	130-1107	2	Spacer, Sleeve
5	812-0070	2	Screw, Machine - Round Head (#6 - 32 x 1-1/4)	11	870-0257	2	Nut, Self-Locking (5/16 - 18)
6	309-0128	1	Thermostat, Adjustable	12	335-0161	1	Cable, Electrical

Entrance Box

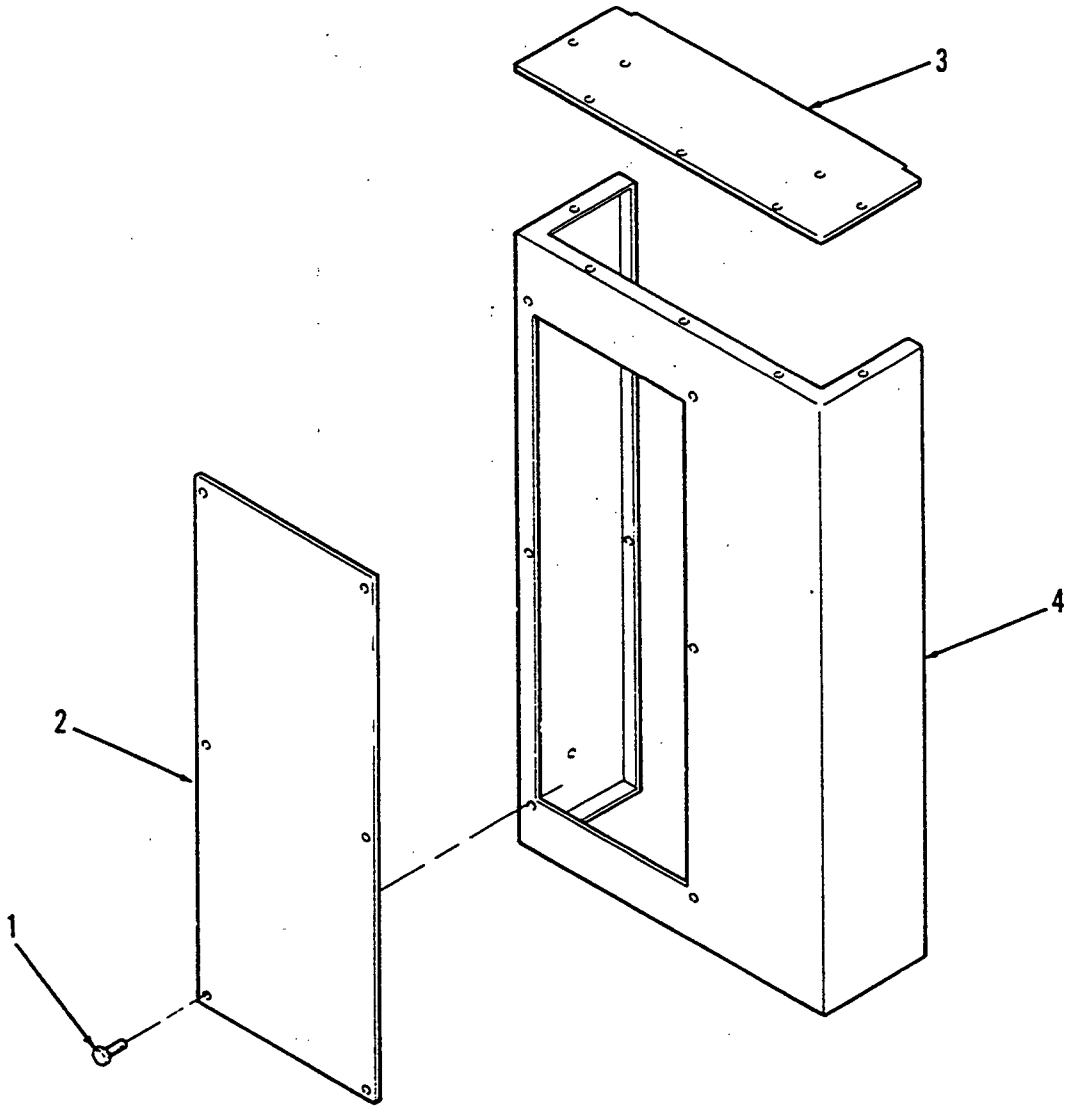

REF NO.	PART NO.	QTY USED	PART DESCRIPTION	REF NO.	PART NO.	QTY USED	PART DESCRIPTION
1	821-0010	22	Screw, Lock (1/4 - 20 x 1/2")	3	301-9653	2	Panel, Breaker - Circuit
2	301-9698	1	Cover, Box - Entrance	4	301-9655	1	Box, Breaker -Circuit

Circuit Breaker

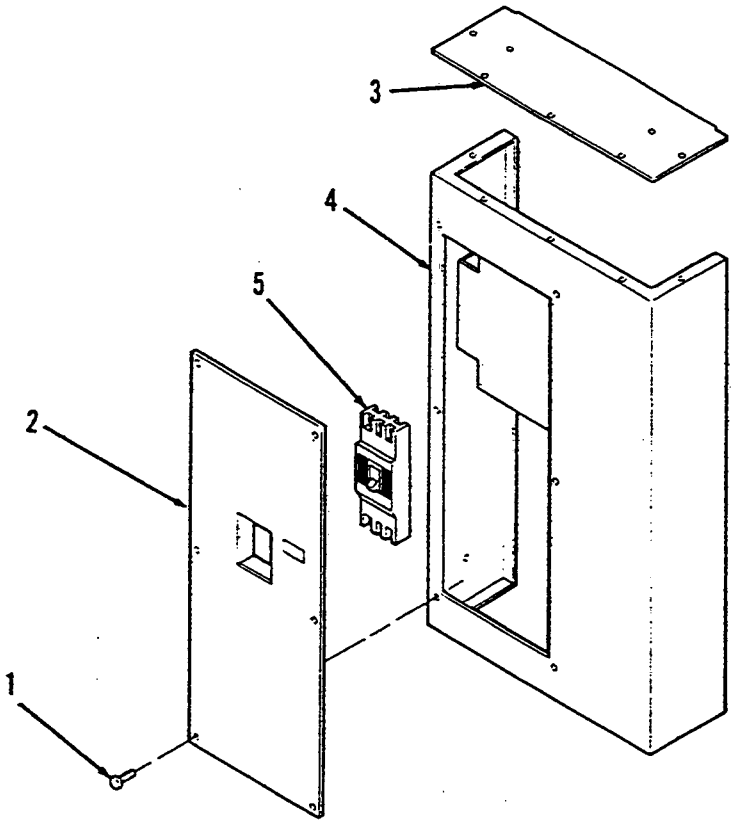

REF NO.	PART NO.	QTY USED	PART DESCRIPTION
1	821-0010	22	Screw, Lock - Hex Head (1/4 - 20 x 1/2")
2			Cover, Box - Circuit Breaker
	301-9652	1	With Cutout Box
	301-9651	1	Without Cutout Box (Not Illustrated)
3	301-9653	2	Panel, Breaker - Circuit
4	301-9654	1	Box, Breaker - Circuit (Includes Mounting Bracket)
5			Breaker, Circuit
	320-1460-10	1	450 Amp
	320-1460-11	1	500 Amp
	320-1460-12	1	600 Amp
	812-0157	4	Screw, Round Head (1/4 - 20 x 1-3/4")
	526-0108	4	Washer, Flat (1/4)
	850-0040	4	Washer, Lock (1/4)
	320-1461-07	1	700 Amp
	320-1461-08	1	800 Amp
	320-1461-09	1	1000 Amp
	320-1461-10	1	1200 Amp
	800-0031	4	Screw, Hex Head (5/16 - 18 x 1-1/2")
	526-0115	4	Washer, Flat (5/16)
	850-0045	4	Washer, Lock (5/16)
	98-2304	1	Decal, Warning - Circuit Breaker